Regulation 2023
Program Structure

1020 Diploma in Mechanical Engineering

Program Outcomes (PO's)

POs are statements that describe what students are expected to know and be able to do upon graduating from the program. These relate to the skills, knowledge, analytical ability, attitude, and behavior that students acquire through the program.
The POs essentially indicate what the students can do from subject-wise knowledge acquired by them during the program. As such, POs define the professional profile of an engineering diploma graduate.
NBA has defined the following seven POs for an Engineering diploma graduate:
PO1: Basic and Discipline-specific knowledge: Apply knowledge of basic mathematics, science and engineering fundamentals and an engineering specialization to solve the engineering problems.
PO2: Problem analysis: Identify and analyse well-defined engineering problems using codified standard methods.
PO3: Design/ development of solutions: Design solutions for well-defined technical problems and assist with the design of systems components or processes to meet specified needs.
PO4: Engineering Tools, Experimentation, and Testing: Apply modern engineering tools and appropriate technique to conduct standard tests and measurements.
PO5: Engineering practices for society, sustainability and environment: Apply appropriate technology in the context of society, sustainability, environment and ethical practices.
PO6: Project Management: Use engineering management principles individually, as a team member or as a leader to manage projects and effectively communicate about well-defined engineering activities.
PO7: Life-long learning: Ability to analyse individual needs and engage in updating in the context of technological changes.

Credit Distribution

Semester	No of Courses	Periods	Credits
Semester I	8	640	20
Semester II	9	640	20
Semester III	8	640	21
Semester IV	7	640	19
Semester V	8	635#	22
Semester VI	3	660	18
		Total	**120**

Industrial Training during Summer vacation for Two Weeks has to be completed to earn the required two credits.

GOVERNMENT OF TAMIL NADU
DEPARTMENT OF TECHNICAL EDUCATION
DIPLOMA IN ENGINEERING & TECHNOLOGY - REGULATION 2023
1020 DIPLOMA IN MECHANICAL ENGINEERING (FT)

Semester I

#	Course Category	Course Type	Code	Course Title	L-T-P	Period	Credit	End Exam
1	Humanities & Social Science	Theory	1000231110	Tamil Marabu	2-0-0	30	2	Theory
2	Basic Science	Theory	1000231230	Basic Mathematics	3-1-0	60	4	Theory
3	Basic Science	Practicum	1000231330	Basic Physics	2-0-2	60	3	Theory
4	Basic Science	Practicum	1000231430	Basic Chemistry	2-0-2	60	3	Theory
5	Engineering Science	Practical	1000231520	Digital Workplace Skills	0-0-4	60	2	Practical
6	Humanities & Social Science	Practicum	1000231640	Communicative English I	1-0-2	45	2	Practical
7	Engineering Science	Practicum	1000231740	Basic Workshop Practices	1-0-2	45	2	Practical
8	Open Elective	Advanced Skill Certification	1000231860	Basic English for Employability	0-0-4	60	2	Practical
9	Humanities & Social Science	Integrated Learning Experience	1000231880	Growth Lab	-	15	0	-
10	Audit Course	Integrated Learning Experience	1000231881	Induction Program - I	-	40	0	-
11	Audit Course	Integrated Learning Experience	1000231882	I&E/ Club Activity/ Community Initiatives	-	30	0	-
12	Audit Course	Integrated Learning Experience	1000231883	Shop Floor Immersion	-	8	0	-
13	Audit Course	Integrated Learning Experience	1000231884	Student-Led Initiative	-	22	0	-
14	Audit Course	Integrated Learning Experience	1000231886	Health & Wellness	-	30	0	-
					Test & Revisions	60		NA
					Library	15		
					Total	**640**	**20**	

GOVERNMENT OF TAMIL NADU
DEPARTMENT OF TECHNICAL EDUCATION
DIPLOMA IN ENGINEERING & TECHNOLOGY - REGULATION 2023
1020 DIPLOMA IN MECHANICAL ENGINEERING (FT)

Semester II

#	Course Category	Course Type	Code	Course Title	L-T-P	Period	Credit	End Exam
1	Humanities & Social Science	Theory	1000232110	Tamils and Technology	2-0-0	30	2	Theory
2	Program Core	Theory	1020232210	Basics of Mechanical Engineering	3-0-0	45	3	Theory
3	Engineering Science	Lab	1000232320	Drafting Practices	0-0-4	60	2	Practical
4	Basic Science	Practicum	1000232440	Applied Mathematics – I	1-0-4	75	3	Practical
5	Basic Science	Practicum	1000232540	Applied Physics – I	1-0-2	45	2	Practical
6	Basic Science	Practicum	1000232640	Applied Chemistry – I	1-0-2	45	2	Practical
7	Engineering Science	Practicum	1000232740	Basic Engineering Practices	1-0-2	45	2	Practical
8	Humanities & Social Science	Practicum	1000232840	Communicative English – II	1-0-2	45	2	Practical
9	Open Elective	Advanced Skill Certification	1000232860	Advanced Skills Certification - II	1-0-2	45	2	NA
10	Humanities & Social Science	Integrated Learning Experience	1000232880	Growth Lab	-	30	0	-
11	Audit Course	Integrated Learning Experience	1000232882	I&E/ Club Activity / Community Initiatives	-	30	0	-
12	Audit Course	Integrated Learning Experience	1000232883	Shop Floor Immersion	-	8	0	-
13	Audit Course	Integrated Learning Experience	1000232884	Student Led Initiative	-	24	0	-
14	Audit Course	Integrated Learning Experience	1000232885	Emerging Technology Seminars	-	8	0	-
15	Audit Course	Integrated Learning Experience	1000232886	Health & Wellness	-	30	0	-
					Test & Revisions	60		NA
					Library	15		
					Total	**640**	**20**	

GOVERNMENT OF TAMIL NADU
DEPARTMENT OF TECHNICAL EDUCATION
DIPLOMA IN ENGINEERING & TECHNOLOGY - REGULATION 2023
1020 DIPLOMA IN MECHANICAL ENGINEERING (FT)

Semester III

#	Course Category	Course Type	Code	Course Title	L-T-P	Period	Credit	End Exam
1	Program Core	Theory	1020233110	Manufacturing Process	3-0-0	45	3	Theory
2	Program Core	Practicum	1020233230	Strength of Materials	3-0-2	75	4	Theory
3	Program Core	Practical/Lab	1020233320	Workshop Practices	0-0-4	60	2	Practical
4	Program Core	Practicum	1020233440	Industrial drives and control	1-0-4	75	3	Practical
5	Program Core	Practicum	1020233540	Production Drawing and Modeling	1-0-4	75	3	Practical
6	Program Core	Practicum	1020233640	Machine Tool Technology	1-0-4	75	3	Practical
7	Open Elective	Advanced Skill Certification	1020233760	Advanced Skills Certification - III	1-0-2	60	2	NA
8	Humanities & Social Science	Integrated Learning Experience	1020233880	Growth Lab	-	30	0	-
9	Audit Course	Integrated Learning Experience	1020233881	Induction Program - II	-	16	0	-
10	Audit Course	Integrated Learning Experience	1020233882	I&E/ Club Activity/ Community Initiatives	-	16	0	-
11	Audit Course	Integrated Learning Experience	1020233883	Shop floor Immersion	-	8	0	-
12	Audit Course	Integrated Learning Experience	1020233884	Student-Led Initiative	-	22	0	-
13	Audit Course	Integrated Learning Experience	1020233885	Emerging Technology Seminars	-	8	0	-
14	Audit Course	Integrated Learning Experience	1020233886	Health & Wellness	0-0-2	30	1	-
					Test & Revisions	30		NA
					Library	15		
					Total	**640**	**21**	

GOVERNMENT OF TAMIL NADU
DEPARTMENT OF TECHNICAL EDUCATION
DIPLOMA IN ENGINEERING & TECHNOLOGY - REGULATION 2023
1020 DIPLOMA IN MECHANICAL ENGINEERING (FT)

Semester IV

#	Course Category	Course Type	Code	Course Title	L-T-P	Period	Credit	End Exam
1	Program Core	Theory	1020234110	Advanced Manufacturing Technology	3-0-0	45	3	Theory
2	Program Core	Practicum	1020234230	Fluid Mechanics	2-0-2	60	3	Theory
3	Program Core	Practical/Lab	1020234320	Advanced Manufacturing Technology Practical	0-0-4	60	2	Practical
4	Program Core	Practicum	1020234440	Sensors and Actuators	1-0-4	75	3	Practical
5	Program Core	Practicum	1020234540	Heat power engineering	1-0-4	75	3	Practical
6	Program Core	Practicum	1020234640	Metrology and Measurements	1-0-4	75	3	Practical
7	Open Elective	Advanced Skill Certification	1020234760	Advanced Skills Certification - IV	1-0-2	60	2	NA
8	Audit Course	Integrated Learning Experience	1020234882	I&E/ Club Activity/ Community Initiatives	-	30	0	-
9	Audit Course	Integrated Learning Experience	1020234883	Shop floor Immersion	-	8	0	-
10	Audit Course	Integrated Learning Experience	1020234884	Student-Led Initiative	-	24	0	-
11	Audit Course	Integrated Learning Experience	1020234885	Emerging Technology Seminars	-	8	0	-
12	Audit Course	Integrated Learning Experience	1020234886	Health & Wellness	-	30	0	-
13	Audit Course	Integrated Learning Experience	1020234887	Special Interest Groups (Placement Training)	-	30	0	-
					Test & Revisions	30		
					Library	30		
					Total	**640**	**19**	

GOVERNMENT OF TAMIL NADU
DEPARTMENT OF TECHNICAL EDUCATION
DIPLOMA IN ENGINEERING & TECHNOLOGY - REGULATION 2023
1020 DIPLOMA IN MECHANICAL ENGINEERING (FT)

Semester V

#	Course Category	Course Type	Code	Course Title	L-T-P	Period	Credit	End Exam
1	Program Core	Theory	1020235110	Elements of Machine Design	3-0-0	45	3	Theory
2	Program Core	Practicum	1020235230	Industrial Engineering and Management	3-0-2	75	4	Theory
3	Program Elective	Practicum		Elective - I	2-0-2	60	3	Theory
4	Program Core	Practicum	1020235440	Maintenance, Repairs & Service	1-0-4	75	3	Practical
5	Program Elective	Practicum		Elective - II	1-0-4	75	3	Practical
6	Humanities & Social Science	Practicum	1020235654	Innovation & Startup	1-0-2	45	2	Project
7	Project/Internship	Project/Internship	1020235773	Industrial Training* [Summer Vacation - 90 Hours] / Mini Project (SW)	-	-	2	Project
8	Open Elective	Advanced Skill Certification	1020235860	Advanced Skills Certification - V	1-0-2	60	2	NA
9	Audit Course	Integrated Learning Experience	1020235981	Induction program - III	-	40	0	-
10	Audit Course	Integrated Learning Experience	1020235984	Student-Led Initiative	-	30	0	-
11	Audit Course	Integrated Learning Experience	1020235986	Health & Wellness	-	30	0	-
12	Audit Course	Integrated Learning Experience	1020235987	Special Interest Groups (Placement Training)	-	40	0	-
					Test & Revisions	45		
					Library	15		
					Total	**635**	**22**	

GOVERNMENT OF TAMIL NADU
DEPARTMENT OF TECHNICAL EDUCATION
DIPLOMA IN ENGINEERING & TECHNOLOGY - REGULATION 2023
1020 DIPLOMA IN MECHANICAL ENGINEERING (FT)

Semester VI								
#	**Course Category**	**Course Type**	**Code**	**Course Title**	**L-T-P**	**Period**	**Credit**	**End Exam**
1	Open Elective	Theory		Electives - III (Pathway)	3-0-0	45	3	Theory
2	Open Elective	Practicum		Elective - IV (Specialisation)	1-0-4	75	3	Practical
3	Industrial Training / Project	Project/Internship		In-house Project / Internship / Fellowship ** Industrial Training (SW)	-	540	12	Project
					Total	**660**	**18**	
3	Industrial Training / Project	Project/Internship	1020236351	Internship	-	540	12	Project
3	Industrial Training / Project	Project/Internship	1020236353	Fellowship	-	540	12	Project
3	Industrial Training / Project	Project/Internship	1020236374	In-house Project	-	540	12	Project
3	Industrial Training / Project	Project/Internship	2020234274 2020237274	Industrial Training (SW)	-	540	12	Project

Note: ** Every student should select any one from the In-House Project or Internship or Fellowship. The guidelines given have to be followed.
For the Sandwich programme, Industrial Training in the fourth and seventh semester will be given. The guidelines given have to be followed.

GOVERNMENT OF TAMIL NADU
DEPARTMENT OF TECHNICAL EDUCATION
DIPLOMA IN ENGINEERING & TECHNOLOGY - REGULATION 2023
1020 DIPLOMA IN MECHANICAL ENGINEERING (FT)

Elective - I

#	Course Category	Course Type	Code	Course Title	L-T-P	Period	Credit	End Exam
1	Program Elective	Practicum	1020235331	Modern QC Tools	2-0-2	60	3	Theory
2	Program Elective	Practicum	1020235332	Composite Materials	2-0-2	60	3	Theory
3	Program Elective	Practicum	1020235333	Refrigeration and Air-Conditioning	2-0-2	60	3	Theory
4	Program Elective	Practicum	1020235334	Value Engineering	2-0-2	60	3	Theory
5	Program Elective	Practicum	1020235335	Green Manufacturing	2-0-2	60	3	Theory
6	Program Elective	Practicum	1020235336	Lean Manufacturing	2-0-2	60	3	Theory
7	Program Elective	Practicum		Inter discipline course #	2-0-2	60	3	Theory

 # Courses from other programmes with the same credit can be considered after proper approval from the Chairman Board of Examinations.

Elective - II

#	Course Category	Course Type	Code	Course Title	L-T-P	Period	Credit	End Exam
1	Program Elective	Practicum	1020235541	CNC Programming	1-0-4	75	3	Practical
2	Program Elective	Practicum	1020235542	Systems Applications and Product (SAP)	1-0-4	75	3	Practical
3	Program Elective	Practicum	1020235543	Industrial IoT	1-0-4	75	3	Practical
4	Program Elective	Practicum	1020235544	Advanced Welding Technologies	1-0-4	75	3	Practical
5	Program Elective	Practicum	1020235545	Industrial Robotics	1-0-4	75	3	Practical
6	Program Elective	Practicum	1020235546	HVAC Systems and Components	1-0-4	75	3	Practical
7	Program Elective	Practicum	1020235547	Automobile Technology	1-0-4	75	3	Practical

GOVERNMENT OF TAMIL NADU
DEPARTMENT OF TECHNICAL EDUCATION
DIPLOMA IN ENGINEERING & TECHNOLOGY - REGULATION 2023
1020 DIPLOMA IN MECHANICAL ENGINEERING (FT)

Elective - III (Pathway)

#	Course Category	Course Type	Code	Course Title	L-T-P	Period	Credit	End Exam
1	Elective | Higher Education	Theory	6000236111	Advanced Engineering Mathematics	3-0-0	45	3	Theory
2	Elective | Entrepreneurship	Theory	6000236112	Entrepreneurship	3-0-0	45	3	Theory
3	Elective | Technocrats	Theory	6000236113	Project Management	3-0-0	45	3	Theory
4	Elective | Technocrats	Theory	6000236114	Finance Fundamentals	3-0-0	45	3	Theory
5	Elective | Technologists	Theory	1020236115	Industry 4.0	3-0-0	45	3	Theory
6	Elective | Technologists	Theory	1020236116	Additive Manufacturing	3-0-0	45	3	Theory
7	Elective | Technologists	Theory	1020236117	Power Plant Engineering	3-0-0	45	3	Theory
8	Elective | Open elective	Theory		Online Elective Courses $	3-0-0	45	3	Theory

$ Online courses with the same credit available in AICTE, SWAYAM, NPTEL and reputed Institutions with the proper evaluation system and certification can be considered after proper approval from the Chairman Board of Examinations.

GOVERNMENT OF TAMIL NADU
DEPARTMENT OF TECHNICAL EDUCATION
DIPLOMA IN ENGINEERING & TECHNOLOGY - REGULATION 2023
1020 DIPLOMA IN MECHANICAL ENGINEERING (FT)

Elective - IV (Specialization)

#	Course Category	Course Type	Code	Course Title	L-T-P	Period	Credit	End Exam
1	Elective	Practicum	1020236241	MEP Equipment Servicing	1-0-4	75	3	Practical
2	Elective	Practicum	1020236242	Maintenance of Machine Tools	1-0-4	75	3	Practical
3	Elective	Practicum	1020236243	Non-Destructive Testing	1-0-4	75	3	Practical
4	Elective	Practicum	1020236244	Process Automation	1-0-4	75	3	Practical
5	Elective	Practicum	1020236245	Product Design & Development	1-0-4	75	3	Practical
6	Elective	Practicum	1020236246	Electric Vehicle Technology	1-0-4	75	3	Practical
7	Elective	Practicum	1020236247	Reverse Engineering	1-0-4	75	3	Practical
8	Elective	Practicum	1020236248	Green Energy & Engineering	1-0-4	75	3	Practical

1020233110	MANUFACTURING PROCESS	L	T	P	C
THEORY		3	0	0	3

Introduction

Generally, a manufacturing process involves products to be manufactured from raw materials. In order to achieve the objectives, certain processes consisting of many operations and steps need to be executed. The manufacturing process begins with the creation of the materials from which the design is made. These materials are then modified through the manufacturing process to become the required part. This will provide the students an opportunity to skill themselves in various manufacturing techniques available in the industry and also how to select the materials for engineering applications.

Course Objectives

The objective of this course is to enable the student,

- To classify the different types of pattern materials, Moulding, Casting
- To explain the different types of welding process
- To study the various types of Hot Working and Press Working process
- To learn the various manufacturing metal by powder metallurgy and Heat Treatment process
- To study various types of Work and tool holding devices and power tools applications.

Course Outcomes

CO1: Discuss the various casting techniques used in foundry.

CO2: Identify appropriate joining techniques and defects in weld components.

CO3: Illustrate various forging and press working processes.

CO4: Classify different powder metallurgy and heat treatment processes.

CO5: Describe various work holding, tool holding and power tools used in shop floor.

Pre-requisites

Nil

1020233110	MANUFACTURING PROCESS	L	T	P	C
THEORY		3	0	0	3

CO/PO Mapping

CO / PO	PO1	PO2	PO3	PO4	PO5	PO6	PO7
CO1	3				1		
CO2	3						
CO3	3						
CO4	3						
CO5	2			2			

Legend: 3-High Correlation, 2-Medium Correlation, 1-Low Correlation

Instructional Strategy

- It is advised that teachers take steps to pique pupils' attention and boost their curiosity to learn.
- Implement task-based learning activities where students work on specific tasks or projects.
- Incorporate technology tools and resources, such as online platforms, interactive multimedia, and virtual communication tools, to enhance engagement and provide additional practice opportunities.
- Incorporate formative and summative assessments to gauge student progress and provide targeted feedback.
- Throughout the course, a demonstrate-practice-activity strategy may be used to ensure that learning is outcome and employability based.
- All demonstrations/Hand-on practices may be followed in the real environment as far as possible.

1020233110	MANUFACTURING PROCESS	L	T	P	C
THEORY		3	0	0	3

Assessment Methodology

	Continuous Assessment (40 marks)				End Semester Examination (60 marks)
	CA1	**CA2**	**CA3**	**CA4**	
Mode	Written test (Two units)	Written test (Another Two units)	Quiz MCQ (Online / Offline)	Model Examination	Written Examination
Duration	2 Periods	2 Periods	1 Hour	3 Hours	3 Hours
Exam Marks	50	50	60	100	100
Converted to	15	15	5	20	60
Marks	15		5	20	60
Tentative Schedule	6th Week	12th Week	13-14th Week	16th Week	

CA1 and CA2: Assessment written test should be conducted for 50 Marks for two units. The marks scored will be converted to 15 Marks. Best of one will be considered for the internal assessment of 15 Marks.

CA1and CA2, Assessment test should be conducted for two units as below.

Answer five questions (5 X 10 Marks = 50 Marks).

Eight questions will be asked, students should write Five questions. Each unit Four questions can be asked. Each question may have subdivisions. Maximum two subdivisions shall be permitted.

CA3: 60 MCQ can be asked by covering the entire portion. It may be conducted by Online / Offline. The answer scripts of every student (online / offline) for this assessment should be kept

for records and future verification. The marks scored should be converted to 5 marks for the internal assessment.

CA4: Model examination should be conducted as per the end semester question pattern. The marks should be converted to 20 marks for the internal assessment.

Question Pattern:

Answer Ten questions by selecting two questions from each unit. Each question carries 10 marks each.

Four questions will be asked from every unit, students should write any two questions. The question may have two subdivisions only.

Syllabus Contents

Unit I	**FOUNDRY TECHNOLOGY**	
Chapter 1.1: Foundry: Pattern – Pattern Materials – types – single piece (solid) and split type only – allowances – moulding – moulding tools and boxes – moulding sands – classifications and properties-core - CO2core making. Melting of cast iron - cupola furnace - Melting of nonferrous metals - crucible furnace melting of steel – Electric arc furnaces. **Chapter 1.2:** Casting: Definition - sand casting using green sand and dry sand - gravity die casting - pressure die casting - hot and cold chamber processes - centrifugal casting - continuous casting– defects in casting - causes and remedies -cleaning of casting and safety practices in foundry		9
Unit II	**WELDING TECHNOLOGY**	
Chapter 2.1: Arc Welding and Gas welding: - Arc welding definition – arc welding equipment – arc welding methods – Carbon arc, metal arc, metal inert gas (MIG), tungsten inert gas (TIG).		9

1020233110	MANUFACTURING PROCESS	L	T	P	C
THEORY		3	0	0	3

Gas Welding: Definition - Gas Welding Equipment - Oxy and acetylene welding - Three types of flame. **Chapter 2.2:** Resistance welding and welding related processes: Resistance welding – definition – classification of resistance welding – butt – spot –seam -projection welding - welding related processes - oxy and acetylene cutting - arc cutting - hard facing - bronze welding - soldering and brazing. Destructive and nondestructive types of tests - magnetic particle test – Die Penetrant test - radiographic and ultrasonic test - defects in welding - causes and remedies - safety practices in welding.	
Unit III	**FORGING AND PRESS WORKING**
FORGING AND PRESS WORKING **Chapter 3.1:** Forging: Hot working, advantages of hot working – hot working operations – rolling – forging – hammer or smith forging, drop forging, upset forging, press forging – roll forging **Chapter 3.2:** Press Working: Types of presses – mechanical and hydraulic presses – press tools and accessories – press working operations– bending operations – angle bending – channel bending – curling –drawing – shearing operations – blanking – piercing – trimming – notching –lancing – shaving – parting off	9
Unit IV	**POWDER METALLURGY AND HEAT TREATMENT**
Chapter 4.1: Powder Metallurgy: Methods of manufacturing metal powders – atomization, reduction and electrolysis deposition – compacting –sintering – sizing – infiltration – mechanical properties of parts made by powder metallurgy – design rule for the powder metallurgy process.	9

Chapter 4.2: Heat Treatment: Purpose – procedures – applications of various heat treatment process – Iron carbon equilibrium diagram Annealing – Normalizing – hardening – tempering –quenching medium – different types of quenching medium.		
UNIT V	**WORK HOLDING, TOOL HOLDING DEVICES AND POWER TOOLS**	
Chapter 5.1: Work Holding Devices: Chucks - Centres - Steady Rest - Follower rest - Face Plate - Catch Plate - Drive plate - carrier - Mandrel - Machine Vice - V block - T Bolts and Clamp - Angle plate - Indexing head - Description and uses. Tool Holding Devices: Four way tool post - Turret indexing - Arbors - Adapter - Drill chuck - Sleeve - Socket - collet. Description and uses. **Chapter 5.2:** Power Tools: Classification - Hand drill- Hammer Drills- Angle Grinder - impact wrench - Circular saw - Chain saw - Jigsaw - Power/impact screwdrivers - Electrical Screwdrivers. Cutters: Craftsman cutter - Reciprocating cutter.		9
	TOTAL HOURS	45
	Assessment Test and Revision with Student activity	15*

*** Common Test and Revision periods can be used. 1 Period per week can be used for this subject.**

Suggested list of Students Activity,

1. Prepare the green sand mould for the solid and split patterns.
2. Practice the basic welding operations.
3. Practice the bending and shearing operations in the press.
4. Prepare a list of work holding devices and tool holding devices used in the workshop.

1020233110	MANUFACTURING PROCESS	L	T	P	C
THEORY		3	0	0	3

Reference Books:

1. Elements of workshop Technology Volume I & II – Hajra Chowdry & Bhattacharaya - IIth Edition - Media Promoters & Publishers Pvt. Ltd.,
2. A Textbook of workshop Technology - R.S.Khurmi & J.K.Gupta - 2nd Edition, S.Chand & Co., Ram Nagar, New Delhi – 2018.
3. Manufacturing process – Begeman - 5th Edition -McGraw Hill, New Delhi 2011.
4. Workshop Technology- WAJ Chapman - Volume I, II, & III – Vima Books Pvt. Ltd., 4262/3, Ansari Road, Daryaganj, New Delhi 110 002.
5. Production Technology – HMT- Edn. 18 - published by Tata McGraw Hill publishing Co. Ltd., 7 West Patel nagar, New Delhi 110 008. – 20181.

Web Reference

1. https://www.youtube.com/watch?v=0iezQ4IeXsc – Metal Casting
2. https://youtu.be/8RUXvdsgsyg - Sand Properties
3. https://www.youtube.com/watch?v=dMcP3aCHyTQ&t=6s –Welding Tech
4. https://www.youtube.com/watch?v=EJ94XC0YfZc&t=801s- Metal Forming
5. https://www.youtube.com/watch?v=AZMbSBVVWhI- Powder metallurgy
6. https://www.youtube.com/watch?v=748_ME0p0Ag- Heat Treatment process

1020233110	MANUFACTURING PROCESS	L	T	P	C
THEORY		3	0	0	3

END SEMESTER QUESTION PATTERN - Theory Exam

Duration: 3 Hrs. **Max. Marks: 100**

Note: Answer Ten questions by selecting two questions from each unit. Each question carries 10 marks each.

Instruction to the Question Setters

Four questions will be asked from every unit, students should write any two questions for 10 marks. The question may have two subdivisions only.

1020233230	STRENGTH OF MATERIALS	L	T	P	C
PRACTICUM		3	0	2	4

Introduction:

Strength of materials is a key subject in mechanical engineering that focuses on how solid objects behave when they are put under various forces and pressures. It's vital it helps us understand and predict if a material can handle certain loads without breaking. Strength of materials is the discipline related to calculation of stresses and strains in structures and mechanical components. It helps engineers make informed decisions about material selection, decision and construction.

Course Objectives:

Acquire knowledge about selection of materials

Towards developing the theoretical basics about the stress, strain and elastic modulus concepts in various components.

Understand the mechanical behavior of materials.

To solve practical problems related to shafts and springs.

Estimate the stresses induced in thin cylinders.

Understand the basics of engineering materials and their role in the development of societies and industries.

Course Outcomes:

On successful completion of this course, the student will be able to

CO1: Discuss various engineering materials and their mechanical properties

CO2: Compute the effects various loads on materials

CO3: Analyse the shaft using the principles of pure torsion

CO4: Analyse the springs in various load conditions

CO5: Determine the various dimensions of thin cylinders under various load conditions

Pre-requisites:

Knowledge of basic mathematics and Science

1020233230	STRENGTH OF MATERIALS	L	T	P	C
PRACTICUM		3	0	2	4

CO/PO Mapping

CO / PO	PO1	PO2	PO3	PO4	PO5	PO6	PO7
CO1	2	3	3				
CO2	2	3	3	2			
CO3	3	3	3				
CO4	3	3	3				
CO5	3	1	3	2			

Legend: 3-High Correlation, 2-Medium Correlation, 1-Low Correlation

Instructional Strategy:

The instructional strategy for teaching strength of materials in polytechnic colleges emphasizes practical application and industry relevance.

Through a curriculum aligned with the state technical education board, the syllabus is broken down into manageable units, prioritizing topics pertinent to Indian engineering contexts.

Visual aids, bilingual explanations, and hands-on demonstrations are utilized to accommodate linguistic diversity and enhance understanding.

Incorporating industry examples and field visit to construction sites and manufacturing facilities fosters experiential learning.

Assessment methods include practical assessment, written exams, and peer learning initiatives, complemented by career guidance to inform students about opportunities in mechanical engineering.

Continuous feedback mechanisms ensure the refinement and effectiveness of the instructional approach.

1020233230	STRENGTH OF MATERIALS	L	T	P	C
PRACTICUM		3	0	2	4

Assessment Methodology:

	Continuous Assessment (40 marks)				End Semester Examination (60 marks)
	CA1	**CA2**	**CA3**	**CA4**	
Mode	Written Test Theory (Any Two Units)	Written Test Theory (Another Two Units)	Practical Test (All Exercises)	Written Test (Complete Theory Portions)	Written Examination (Complete Theory Portions)
Duration	2 Periods	2 Periods	3 Hours	3 Hours	3 Hours
Exam Marks	50	50	100	100	100
Converted to	10	10	15	15	60
Marks	10		15	15	60
Tentative Schedule	6th Week	12th Week	15th Week	16th Week	

Note:

- **CA1 and CA2:** Assessment written test should be conducted for 50 Marks. The marks scored will be converted to 10 Marks for each test. Best of one will be considered for the internal assessment of 10 Marks.

  CA1 and CA2, Assessment written test should be conducted for two units as below.

  Answer any Five questions. (5 X 10 Marks = 50 Marks).

  Eight questions will be asked, students should write Five questions.

  Each unit Four questions can be asked. Each question may have subdivisions. Maximum two subdivisions shall be permitted.
- **CA 3:** All the exercises/experiments should be completed and kept for the practical test. The students shall be permitted to select any one experiment by lot for the test. The practical test should be conducted as per the scheme of evaluation as below. The marks awarded for 100 marks will be converted to 15 Marks for the internal mark.

Practical documents should be maintained for every exercise / experiment immediately after completion of the practice. The practical document should be submitted for the practical test. Each exercise/experiment should be evaluated for 10 Marks. The total marks awarded should be converted to 30 Marks for the practical test as per the scheme of evaluation as below.

The details of the practical documents to be prepared as per the instruction below.

Each exercise observation and calculations should be completed on the day of practice. The same shall be evaluated for 10 marks on the day or next day of practice before commencement of the next exercise.

This documentation can be carried out in a separate notebook or printed manual or file. The reading and calculations and graph should be written by the student manually. The evaluated practical document should be submitted for the Practical Test (CA3). The mark scored by the students should be converted to 30 marks. The same should be included as per the allocation in the practical test.

The detailed date of the practices and its evaluations should be maintained in the course logbook. The log book and the practical documents should be submitted for the verification by the Flying Squad and DOTE Official.

SCHEME OF EVALUATION - Practical Test

Sl.No.	Description	Marks
A	Aim / Apparatus required	10
B	Procedure / Observation	20
C	Formula / Calculation	20
D	Result / Graph	10
E	Practical document (All Practicals)	30
F	Viva Voce	10
Total		100

1020233230	STRENGTH OF MATERIALS	L	T	P	C
PRACTICUM		3	0	2	4

CA4: Model examination should be conducted for complete theory portions as per the end semester question pattern. The marks awarded should be converted to 15 marks for the internal assessment.

Question Pattern:

Answer Ten questions by selecting two questions from each unit. Each question carries 10 marks each.

Four questions will be asked from every unit, students should write any two questions. The question may have two subdivisions only.

Syllabus Contents

Unit I	**SELECTION OF MATERIALS**
Theory: **Engineering materials:** Introduction to engineering materials- Ferrous and Non Ferrous materials - material selection-factors affecting the selection of materials-procedure for materials selection. Advanced materials - smart materials and nanomaterials-classification of nanomaterials – applications. **Hardness test:** Brinell hardness test, Rockwell hardness test, Vickers Hardness test – Shore Hardness Test (Durometer) - Knowledge on Micro Hardness test	9
Practical: **EXPERIMENT : 1.** **Hardness Test:** Determination of Rockwell hardness number for various materials like mild steel, high carbon steel, brass, copper, aluminium and Plastics (Any Two Materials).	3

1020233230	STRENGTH OF MATERIALS	L	T	P	C
PRACTICUM		3	0	2	4

Unit II	DEFORMATION OF METALS	
Theory: **Simple stresses and strains:** Definition - load, stress and strain - classification of force systems - tensile, compressive and shear force systems– Definition - Hooke's law -Young's modulus - working stress, factor of safety, load factor, shear stress and shear strain - modulus of rigidity - deformation due to tension and compressive forces - simple problems in tension, compression and shear force. **Mechanical testing of materials:** Tensile test of mild steel in UTM - stress strain diagram - limit of proportionality - elastic limit -yield stress - breaking stress - ultimate stress - percentage of an elongation and percentage reduction in area (no problems)- fatigue test - creep test.		9
Practical: **EXPERIMENT : 2.** **Tensile Test on materials :** Determine young's modulus of elasticity, yield stress, ultimate stress, breaking stress, percentage of elongation and percentage of reduction in area of a given specimen (Mild steel, Cast Iron , Aluminium, Brass) (Any one material) and plot stress strain diagram.		4
Unit III	**ELASTIC CONSTANTS AND STRAIN ENERGY**	
Theory: **Elastic constants:** Definition - lateral strain – poison's ratio - volumetric strain - bulk modulus - volumetric strain of rectangular and circular bars (No derivation) - problems connecting linear, lateral and volumetric deformation – Simple problems on elastic constants. **Strain energy:** Definition - proof resilience - modulus of resilience - the expression for strain energy stored in a bar due to axial load - instantaneous stresses due to sudden and impact loads (No derivation) - problems computing instantaneous stress and deformation in sudden and impact loadings.		9

1020233230	STRENGTH OF MATERIALS	L	T	P	C
PRACTICUM		3	0	2	4

Practical: **EXPERIMENT : 3.** Impact test : Find the impact strength of the given specimen (Mild steel, Cast Iron, Aluminium and Brass) (Any Two materials) using izod test and Charpy test.		3
Unit IV	**THEORY OF TORSION**	
Theory: **Torsion:** Theory of torsion - assumptions - torsion equation $\frac{T}{J}=\frac{f_s}{R}=\frac{C\theta}{l}$ (no derivation)- strength of solid and hollow shafts - power transmitted - definition - polar modulus – sectional modulus - torsional rigidity - strength and stiffness of shafts - comparison of hollow and solid shafts in weight and strength considerations - advantages of hollow shafts over solid shafts – shear stress distribution - problems. **Material testing:** Torsion testing machine (Description only).		9
Practical: **EXPERIMENT : 4.** **Torsion test:** Determine the shear stress and modulus of rigidity of the given specimen (Mild steel, Cast Iron, Aluminium and Brass) (Any two materials) using a Torsion testing machine.		4
Unit V	**SPRINGS AND THIN CYLINDERS**	
Theory: **Springs:** Types of springs - laminated and coiled spring - applications - types of coiled springs - difference between open and closely coiled helical springs - closely coiled helical spring subjected to an axial load (no derivation) - problems to determine shear stress, deflection, stiffness and resilience of closed coil helical springs.		9

Thin cylinders: Definition - thin cylindrical shell - failure of thin cylindrical shell subjected to internal pressure - hoop and longitudinal stresses causes in thin cylindrical shell subjected to internal pressure (no derivation) - simple problems - change in dimensions of a thin cylindrical shell subjected to internal pressure - problems	
Practical: **EXPERIMENT : 5.** **Test on springs of circular section:** Determine the modulus of rigidity and strain energy, and stiffness of the open coiled helical springs. **EXPERIMENT : 6.** Determine the modulus of rigidity and strain energy, and stiffness of the closed coiled helical springs.	6
Revision + Test + Students Activity	10
TOTAL HOURS	75

Suggested List of Students Activity:

Other than the classroom learning , the following are the suggested student related co-curricular activities which can be undertaken to accelerate the attainment of the various outcomes in this course.

- Conduct a survey, specific to properties of various types of materials used in mechanical engineering and prepare a report.
- Compare the strength of the solid shaft with that of hollow shaft for the same power transmission for an automobile and make a report.
- Students can be given practices in the Virtual Labs | Mechanical Engineering (vlab.co.in). This can be given to a team of students and make them prepare a report.

1020233230	STRENGTH OF MATERIALS	L	T	P	C
PRACTICUM		3	0	2	4

Sample Experiments: Four bar mechanism, Slider crank mechanism, Elliptical Trammel, Cam Mechanism, Linkage Model, Crank and Slotted Mechanism, Whitworth Mechanism, Straight Line Mechanism, Universal Joint etc…

Text and Reference books:

1. Dr. P.Purushothama Raj, V. Ramasamy, Strength of Materials, Pearson Edition 2013.
2. Dr. R K Bansal, strength of materials, 5th edition , laxmi publications private limited,2013.
3. R S Khurmi , strength of materials, edition 2019 , s chand publications, 2019.
4. B K Sarkar, strength of materials, 10th edition, tata mcgraw hill education private limited, 2012.
5. R K Rajput, materials science and engineering, 5th edition, S K Kataria and sons publications, 2024

Web reference:

- https://youtu.be/GkFgysZC4Vc?si=j-q-9UMmeDg64YNB
- https://youtu.be/uA_HqCGo8Pg?si=q03sPw7010ot0BdT
- https://youtu.be/WERoSRcnafA?si=b7Xv3RI1s8LvSUhw

Equipment / Facilities required to conduct the Practical Portions.

1. Universal testing machine.	01
2. Rockwell's hardness testing machine.	01
3. Impact testing machine.	01
4. Torsion testing machine.	01
5. Spring testing machine	01

Required instruments and consumables.

1020233230	STRENGTH OF MATERIALS	L	T	P	C
PRACTICUM		3	0	2	4

END SEMESTER QUESTION PATTERN - Theory Exam

Duration: 3 Hrs. **Max. Marks: 100**

Note: Answer Ten questions by selecting two questions from each unit. Each question carries 10 marks each.

Instruction to the Question Setters

Four questions will be asked from every unit, students should write any two questions for 10 marks. The question may have two subdivisions only.

1020233320	WORKSHOP PRACTICES	L	T	P	C
PRACTICAL		0	0	4	2

Introduction:

Diploma technocrats frequently encounter diverse manufacturing processes. This course workshop practice aims to enhance student's comprehension of manufacturing methods, like Welding, Soldering, Brazing and use of Power tools.

Course Objectives:

- To identify the tools and equipment used in workshop practice.
- Perform welding operations to make different types of joints.
- Identify the different welding defects.
- Practical skills on Soldering, Brazing and power tools.
- Prepare a record of work for all the exercises.

Course Outcomes:

On successful completion of this course, the student will be able to

CO1: Recall the safety procedure followed on the shop floor.

CO2: Demonstrate skills in all types of welding.

CO3: Acquire skills on soldering.

CO4: Acquire skills on Brazing.

CO5: Demonstrate skills on the use of Power tools.

Pre-requisites:

Basic Workshop Practices and Basic Engineering Practices.

1020233320	WORKSHOP PRACTICES	L	T	P	C
PRACTICAL		0	0	4	2

CO/PO Mapping

CO / PO	PO1	PO2	PO3	PO4	PO5	PO6	PO7
CO1	2			3			1
CO2	2			3	1		
CO3	2			3			
CO4	2			3			
CO5	2			3			

Legend: 3-High Correlation, 2-Medium Correlation, 1-Low Correlation

Instructional Strategy:

- Engage and Motivate: Instructors should actively engage students to boost their learning confidence.
- Real-World Relevance: Incorporate relatable, real-life examples and engineering applications to help students understand and appreciate course concepts.
- Interactive Learning: Utilize demonstrations and plan interactive student activities for an engaging learning experience.
- Application-Based Learning: Employ a theory-demonstrate-practice-activity strategy throughout the course to ensure outcome-driven learning and employability.
- Simulation and Real-World Practice: Conduct demonstrations and hands-on activities in a simulated environment, transitioning to real-world scenarios when possible.
- Encourage Critical Analysis: Foster an environment where students can honestly assess experiment outcomes and analyze potential sources of error in case of discrepancies

1020233320	WORKSHOP PRACTICES	L	T	P	C
PRACTICAL		0	0	4	2

Assessment Methodology:

	Continuous Assessment (40 marks)				End Semester Examination (60 marks)
	CA1	**CA2**	**CA3**	**CA4**	
Mode	Practical Test	Practical Test	Practical Document	Practical Test	Practical Examination
Portion	First Cycle	Second Cycle	All Exercises	All Exercises	All Exercises
Duration	2 Periods	2 Periods	Regularly	3 Hours	3 Hours
Exam Marks	50	50	100	100	100
Converted to	10	10	10	20	60
Marks	10		10	20	60
Tentative Schedule	7th Week	14th Week	15th Week	16th Week	

Note:

- **CA1 and CA2:** All the exercises/experiments as per the portions mentioned above should be completed and kept for the practical test. The students shall be permitted to select any one by lot for the test. The practical test should be conducted as per the scheme of evaluation as below. The marks awarded will be converted to 10 Marks for each assessment test. Best of one will be considered for the internal assessment of 10 Marks.

  Cycle I: 1, 2, 3, 4 and 5.

  Cycle II: 6, 7, 8, 9 and 10.

1020233320	WORKSHOP PRACTICES	L	T	P	C
PRACTICAL		0	0	4	2

SCHEME OF EVALUATION

PART	DESCRIPTION	MARKS
A	Aim & Tools required	10
B	Preparation	20
C	Welding / Cutting/ Joining	20
TOTAL		**50**

- **CA 3:** Practical document should be maintained for every exercise immediately after completion of the practice. The same should be evaluated for 10 Marks. The total marks awarded should be converted to 10 Marks for the internal assessment. The practical document should be submitted for the Practical Test and End Semester Examination with a bonafide certificate

  The details of the documents to be prepared as per the instruction below.

  Each exercise should be completed on the day of practice. The same shall be evaluated for 10 marks on the day or next day of practice before commencement of the next exercise.

  This documentation can be carried out in a separate notebook or printed manual or in a file with the documents. The procedure and sketch should be written by the student manually.

  The detailed date of the practices and its evaluations should be maintained in the course logbook. The logbook and the practical documents should be submitted for the verification by the Flying Squad and DOTE Official.
- **CA 4:** All the exercises should be completed and kept for the practical test. The students shall be permitted to select any one by lot for the test. The practical test (CA4) should be conducted as per the scheme of evaluation as below. The marks awarded should be converted to 20 Marks for the internal assessment.

1020233320	WORKSHOP PRACTICES	L	T	P	C
PRACTICAL		0	0	4	2

SCHEME OF EVALUATION

Part	Description	Marks
A	Aim & Tools required	10
B	Procedure	20
C	Preparation	20
D	Welding / Cutting/ Joining	20
E	Accuracy / Tool Handling / Finish / Result	20
F	Viva Voce	10
	TOTAL MARKS	**100**

Syllabus Contents

Introduction	**Period**
BUREAU OF INDIAN STANDARDS CODE OF PRACTICE FOR SAFETY AND HEALTH REQUIREMENTS IN ELECTRIC AND GAS WELDING AND CUTTING OPERATIONS – IS : 818 - 1968 Fire prevention and protection-Protection of personnel - general and protective equipment- Work in confined spaces - ventilation and health protection. Soldering - Basic principles – Brazing – Basic principles.	

Practical Exercises **40 Periods**

1. Lap joint Arc Welding (RawMaterial: 40 mm x 10 mm MS flat)
2. T- Joint - Arc Welding (RawMaterial: 40 mm x 10 mm MS flat)
3. Butt Joint (TIG / MIG Welding) (RawMaterial: MS Pipe / MS Square tube)
4. Profile cutting – circular profile - Gas cutting. (Raw Material: 100 x 100 mm X 6mm M.S.Flat)

1020233320	WORKSHOP PRACTICES	L	T	P	C
PRACTICAL		0	0	4	2

5. Lap joint - Gas Welding - (Raw Material: 10G Mild Steel)
6. Spot welding - Lap joint - Make a tray and join the vulnerable points (Minimum 8 Points) (Raw Material: GI/MS Sheet 22 G).
7. Solder as per the given circuit diagram.
8. Braze the joints of the copper tube. Prepare the tube with Cutting, bending, flaring, Swaging and pinching practice.
9. Dismantle and Assemble the Bolt/Nut using wrench power tools. (Pneumatic / Electric). (Sample Exercise Flange / Cylinder head / Remove Tire from the disc / etc…)
10. Profile cutting – Using Jigsaw/Craftsman cutter/Reciprocating cutter. (Raw Material: 100 x 100 mm X 6 mm M.S.Flat / Wood)

Test & Revision **10 Periods**

Suggested List of Students Activity: **10 Periods**

1. Study the welding symbols and welding testing procedure.
2. List Causes of welding defects and suggest remedies.
3. Practices in Soldering and Brazing. Compare the soldering and brazing process.
4. Enumerate safety guidelines and precautions for a welding shop.
5. Inspect the assembly lines in an Industry and submit a report.

Text and Reference Books:

1. Manufacturing Technology Vol-1 by P N RAO, McGraw Hill, New Delhi.
2. Manufacturing Technology Vol-2 by P N RAO, McGraw Hill, New Delhi.
3. Elements of Workshop Technology Vol-1 by S K Hajra Choudhury, A K Hajra Choudhury, Nirjhar Roy-Media Promoters & Publisher PVT. Ltd.
4. CODE OF PRACTICE FOR SAFETY AND HEALTH REQUIREMENTS IN ELECTRIC AND GAS WELDING AND CUTTING OPERATIONS (First Revision) IS : 818 – 1968- Seventh Reprint SEPTEMBER 1998

1020233320	WORKSHOP PRACTICES	L	T	P	C
PRACTICAL		0	0	4	2

Web-based/Online Resources:

1. https://www.youtube.com/watch?v=RyLvVMg84xs -Basics of welding process2.
2. https://www.youtube.com/watch?v=nBwRpI_0d50 - Fundamentals of Brazing3.
3. ttps://www.youtube.com/watch?v=Wbd0mhOfGRg - Soldering Basics

END SEMESTER EXAMINATION – PRACTICAL EXAM.

BOARD EXAMINATIONS

Note:

- All the exercises have to be completed, any one exercise will be given for examination.
- All the exercises should be given in the question paper. The student is allowed to select by lot or question papers issued by the DOTE Exam section shall be used.
- Practical documents along with the activity report should be submitted for the End Semester Examinations.

DETAILED ALLOCATION OF MARKS.

Part	Description	Marks
A	Aim & Tools required	10
B	Procedure	20
C	Preparation	20
D	Welding / Cutting/ Joining	20
E	Accuracy / Tool Handling / Finish / Result	20
F	Viva Voce	10
	TOTAL MARKS	**100**

1020233320	WORKSHOP PRACTICES	L	T	P	C
PRACTICAL		0	0	4	2

Equipment / Facilities required conducting the Practical Course.

S.No	Name of the Equipment's	Quantity Required
1.	Arc welding booth	2 Nos with welding transformer
2.	TIG / MIG welding booth	1 No
3.	Gas welding unit	1 Set (Oxygen and acetylene cylinder)
4.	Welding shield	5Nos
5.	Gas welding goggles	5Nos
6.	Chipping hammer	5Nos
7.	Leather Gloves 18"	5 Sets
8.	Spot welding machine	1 No
9.	Brazing equipment	1 No
10.	Soldering equipment	1 No
11.	Electric Jig saw / Craftsman cutter / Reciprocating cutter	1 No
12.	Pneumatic / Electric impact wrench	1 No
13.	Cutting, bending, flaring, Swaging and pinching tool for copper tube	Each 1No
14.	Consumables	Sufficient quantity

1020233320	WORKSHOP PRACTICES	L	T	P	C
PRACTICAL		0	0	4	2

Exercises drawing:

1. Lap Joint - Arc Welding (Raw Material: 40 mm X 10 mm MS flat)

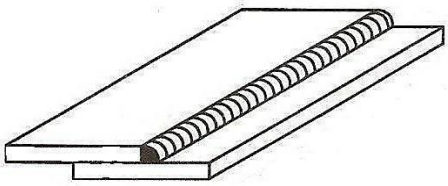

2. T-Joint -Arc Welding (RawMaterial:40 mm X 10 mm MS flat)

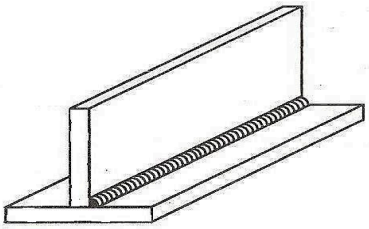

3. Butt Joint-TIG / MIG Welding (Raw Material: MS Pipe / MS Square tube)

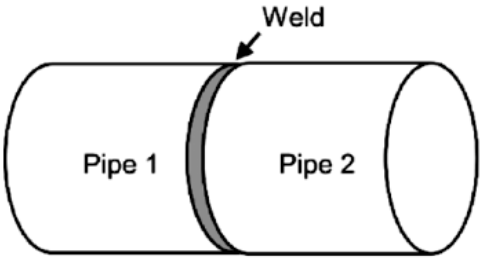

4. Profile cutting- Circular profile -cutting Gas cutting
(Raw Material : 100 x 100mm x 6mm M.S. flat)

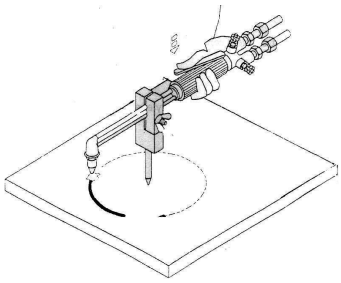

5. Lap joint - Gas Welding- (Raw Material: 10G Mild Steel)

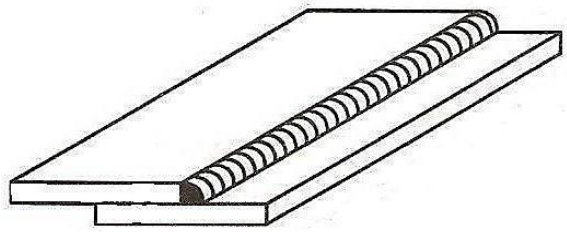

6. Spot welding - Lap joint - Make a tray / dustpan and join the vulnerable points (Minimum 8 Points) (Raw Material: GI/MS Sheet 22 G)

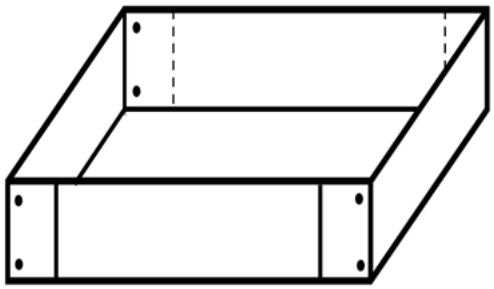

7. Solder as per the given circuit diagram / Battery pack with series and parallel connections.

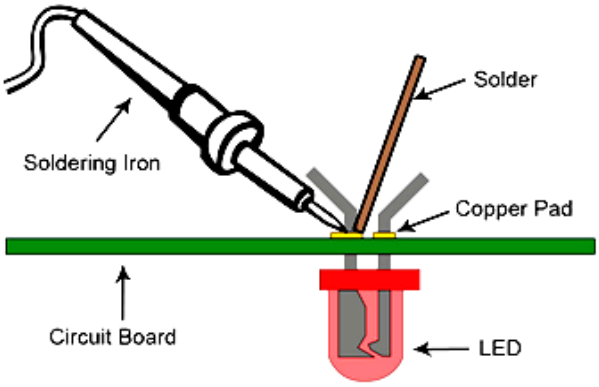

8. Braze the joints of the copper tube. Prepare the tube with Cutting, bending, flaring, Swaging and pinching practice.

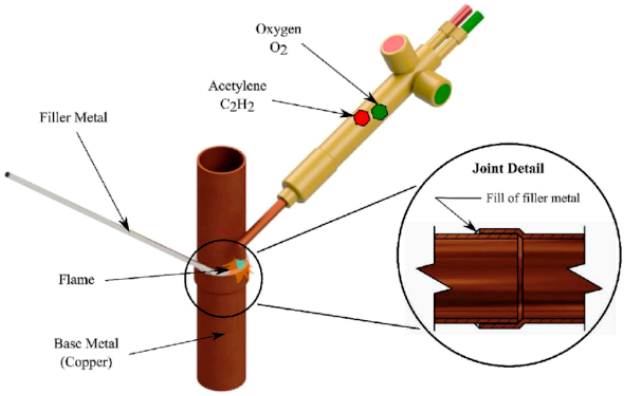

Cutting, bending, flaring, Swaging and pinching practice using copper tube.

9. Dismantle and Assemble the Bolt/Nut using wrench power tools. (Pneumatic / Electric). (Sample Exercise Flange / Cylinder head / Remove Tire from the vehicle disc / etc…)

10. Profile cutting – Using Jigsaw. (Raw Material: 100 x 100 mm X 6 mm M.S.Flat / Wood)

Text and Reference Books:

1. CODE OF PRACTICE FOR SAFETY AND HEALTH REQUIREMENTS IN ELECTRIC AND GAS WELDING AND CUTTING OPERATIONS (First Revision) IS : 818 – 1968 - Seventh Reprint SEPTEMBER 1998.
2. Hajra Choudry & Battacharya - Elements of Workshop Technology - Vol. I & II -Edition 11, - Media Promoters and Publishers Pvt. Ltd.,– 2007.
3. P N RAO-Manufacturing technology - 5th edition - McGraw Hill, New Delhi.2018.

Web-based Online Resources:

- https://www.youtube.com/watch?v=dMcP3aCHyTQ Welding Processes – NPTEL-NOC IITM
- https://www.youtube.com/watch?v=TpvmJBeGUrg&list=PLyqSpQzTE6M-KwjFQByBvRx464XpCgOEC&index=2 Classification of welding processes and definition of welding arc - NEPTE - NOC IITM.

1020233440	INDUSTRIAL DRIVES AND CONTROL	L	T	P	C
PRACTICUM		1	0	4	3

Introduction:

Motion control is required in a large number of industrial and domestic applications. Systems employed for getting the required motion and their smooth control are called Drives. Drives require prime movers like Diesel or petrol engines, gas or steam turbines, hydraulic motors or electric motors. These prime movers deliver the required mechanical energy for getting the motion and its control. Drives employing Electric motors as prime movers for motion control are called Electric Drives. Further electrical speed control in almost all industrial applications are incomplete without the use of the specific electric drive. This course will empower the students with the necessary skills to understand the concept associated with Electrical Drives.

Course Objectives:

The objective of this course is to enable the student to

- Explain the necessity of A.C Circuit, Fuse, MCB, ELCB and Contactor.
- Explain the Working of RPS, Logic Gates and PLC.
- Define electric drive, its parts, advantages and explain choice of electric drive.
- Understand the characteristics of DC Shunt Motor and 3 Phase Induction Motor.
- Discuss the concept of AC Drive, Stepper Motor Drive and Servo Motor Drive.

Course Outcomes:

On successful completion of this course, the student will be able to

CO1: Demonstrate the working of MCB, ELCB and Contactor.

CO2: Describe the working of RPS and Simple LED Circuit.

CO3: Describe the concept of Logic Gate and PLC.

CO4: Demonstrate the starting and speed control methods of Induction Motor.

CO5: Interface and test the working of Driver for DC Motor and Stepper Motor.

Pre-requisites:

Basics of Science and Engineering

1020233440	INDUSTRIAL DRIVES AND CONTROL	L	T	P	C
PRACTICUM		1	0	4	3

CO/PO Mapping:

CO / PO	PO1	PO2	PO3	PO4	PO5	PO6	PO7
CO1	3	1	1	2	-		
CO2	3	1	1	2	-		
CO3	3	1	1	2	-		
CO4	3	1	1	2	-		
CO5	3	1	1	2	-		

Legend: 3-High Correlation, 2-Medium Correlation, 1-Low Correlation

Instructional Strategy:

- It is advised that teachers take steps to pique pupils' attention and boost their curiosity to learn.
- Implement task-based learning activities where students work on specific tasks or projects.
- Incorporate technology tools and resources, such as online platforms, interactive multimedia, and virtual communication tools, to enhance engagement and provide additional practice opportunities.
- Incorporate formative and summative assessments to gauge student progress and provide targeted feedback.
- Throughout the course, a theory-demonstrate-practice-activity strategy may be used to ensure that learning is outcome and employability based.
- All demonstrations/Hand-on practices may be followed in the real environment as far as possible.

1020233440	INDUSTRIAL DRIVES AND CONTROL	L	T	P	C
PRACTICUM		1	0	4	3

Assessment Methodology:

	Continuous Assessment (40 marks)				End Semester Examination (60 marks)
	CA1	**CA2**	**CA3**	**CA4**	
Mode	Practical Test	Practical Test	Written Test Theory	Practical Test	Practical Examination
Portion	Cycle I Experiments/ 50% Experiments	Cycle II Experiments/ Another 50% Experiments	All Units	All Experiments	All Experiments
Duration	2 Periods	2 Periods	3 Hours	3 Hours	3 hours
Exam Marks	60	60	100	100	100
Converted to Marks	10	10	15	15	60
Marks	10		15	15	60
Internal Marks	40				
Tentative Schedule	7th Week	14th Week	15th Week	16th Week	

Note:

- **CA1 and CA2:** All the exercises/experiments should be completed as per the portions above and kept for the practical test. The students shall be permitted to select any one by lot for the test. The practical test should be conducted as per the scheme of evaluation as below. The marks awarded shall be converted to 10 Marks for each assessment test. Best of one will be considered for the internal assessment of 10 Marks.

  Practical documents should be maintained for every experiment immediately after completion of the practice. The practical document should be submitted for the practical test. The same should be evaluated for 10 Marks for each exercise/experiment. The total

marks awarded should be converted to 10 Marks for the practical test as per the scheme of evaluation as below.

The details of the documents to be prepared as per the instruction below.

Each experiment should be completed on the day of practice. The same shall be evaluated for 10 marks on the day or next day of practice before commencement of the next experiment.

This documentation can be carried out in a separate notebook or a printed manual or a file with documents. The Circuit Diagram, Readings, Calculations and Graph / Result should be written by the student manually.

The detailed date of the practices and its evaluations should be maintained in the course logbook. The log book and the practical documents should be submitted for the verification by the Flying Squad and DOTE Official.

SCHEME OF EVALUATION

PART	DESCRIPTION	MARKS
A	Aim & Apparatus Required	5
B	Circuit Diagram	20
C	Connections and Execution	25
TOTAL		50
D	Practical Documents (As per the portions)	10
Total Marks		60

- **CA 3:** Written Test for complete theory portions should be conducted for 100 Marks as per the question pattern below. The marks scored will be converted to 15 Marks for internal assessment.

1020233440	INDUSTRIAL DRIVES AND CONTROL	L	T	P	C
PRACTICUM		1	0	4	3

Question pattern – Written Test Theory

Description		Marks	
Part – A	30 MCQ Questions.	30 X 1 Mark	30 Marks
Part – B	7 Questions to be answered out of 10 Questions.	7 X 10 Marks	70 Marks
TOTAL			100 Marks

- **CA 4:** All the exercises/experiments should be completed and kept for the practical test. The students shall be permitted to select any one by lot for the test. The practical test should be conducted as per the scheme of evaluation below. The marks awarded should be converted to 15 Marks for the internal assessment.

SCHEME OF EVALUATION

Model Practical Examination and End Semester Examination - Practical Exam

PART	DESCRIPTION	MARKS
A	Aim & Apparatus Required	5
B	Circuit Diagram	20
C	Connections and Execution	25
D	Output / Result	10
E	Written Test (Theory Portions)	30
F	Viva Voce	10
	TOTAL	100

Note: For the written test 30 MCQ shall be asked from the theory portions.

1020233440	INDUSTRIAL DRIVES AND CONTROL	L	T	P	C
PRACTICUM		1	0	4	3

Syllabus Contents.

Theory Portion : UNIT I	
A.C CIRCUITS	Period
Review of Ohm's Law – Review of Series and Parallel Connection – Fundamentals of AC Voltage and Current - Peak Value, Average Value, RMS value of Sine wave – Frequency - Time period – Amplitude - Power and Power Factor – Current calculation by using single phase power formula – Introduction about Three phase ac supply - Current calculation by using three phase power formula - Necessity of Contactor - Solenoid type Contactor - Necessity of Fuse – Function of MCB – Function of ELCB.	4
ANALOG AND DIGITAL ELECTRONICS	
Name, Symbol and uses of Semiconductor Devices (Diode, Transistor, LED and SCR) – Importance of current limiting resistor in LED circuit – RGB LED - Working of Half wave and Full wave rectifiers - Block Diagram of Regulated Power Supply. Logic gates: Binary Number System - Positive and Negative Logic - Definition, Symbol, Truth table and Boolean expression for OR, AND, NOT, NOR, NAND, EX-OR and EX-NOR gates - Universal Logic Gates: NAND and NOR. Programmable Logic Controller: Definition - Block Diagram of Programmable Logic Controller – PLC Scan – Ladder Logic for AND Gate and OR Gate.	4
Practical Exercises:	

Ex.No	**Name of the Experiment**	**Period**
1.	VOLTAGE, CURRENT AND POWER MEASUREMENT IN SINGLE PHASE AC CIRCUIT. Activities to Perform: a) Conduct an experiment to measure voltage, current and power in a single phase a.c circuit by using Voltmeter, Ammeter and Wattmeter respectively for different loads.	4

	b) Repeat the same experiment by replacing above meters with a single Digital Power Monitor. c) Compare and Discuss the observations.	
2.	CONSTRUCT LED CIRCUIT WITH CURRENT LIMITING RESISTOR Activities to Perform: a) From the voltage and current rating of the given LED, calculate the value of the resistor to be connected in series with it. b) Construct and test a simple circuit using DC Source, Resistor and LED. c) Construct and test a simple circuit using DC Source, Resistor and RGB LED.	4
3.	CONSTRUCT DC REGULATED POWER SUPPLY UNIT Activities to Perform: a) Construct 5V or 12V DC Regulated Power Supply circuit using Bridge Rectifier, Capacitor Filter and IC Voltage Regulator. b) Observe the voltage at various stages of the circuit. c) Discuss the function of each stage of the RPS unit.	4
4.	DEMONSTRATE THE WORKING OF MCB AND ELCB Activities to Perform: a) Connect Single Pole MCB with Load bank and Test the Tripping Operation for over load and/or Short Circuit fault. b) Connect ELCB with Lamp Load and Test the Tripping Operation for Earth fault.	4
5.	LOGIC GATE USING ICs Activities to Perform: a) Construct the circuit and verify the Truth Tables of AND, OR, NOT, NAND, NOR, EX-OR Logic gates by using corresponding Logic Gate ICs. b) Compare and Discuss the observations.	4

1020233440	INDUSTRIAL DRIVES AND CONTROL	L	T	P	C
PRACTICUM		1	0	4	3

Theory Portion : UNIT II	
ELECTRIC DRIVES	
Introduction – Need for Drive – Advantages of Electric Drive – Parts of Electric Drive – Classification of Drives (Group Drive, Individual Drive and Multimotor Drive) – Classification of Electric Motors - Characteristics of DC Shunt Motor and DC Series Motor – Necessity of starters - Three point starter. Construction, Working Principle and Characteristics of Three Phase squirrel cage induction motor – DOL Starter – Star Delta Starter - Effect of Unbalanced source voltage and Single Phasing – Methods of Speed control of three phase induction motor - Block diagram of Variable Frequency Drive (VFD) - Electric Braking – Types of Electrical Braking – Selection of Motors for different applications – Motors used for Traction system. Overview of PMDC Motor, BLDC Motor, Stepper Motor Drive, Servo Motor Drive – L293D Motor Driver IC.	7

Practical Exercises:

Ex.No	Name of the Experiment	Period
6.	LOAD TEST ON DC SHUNT MOTOR Activity to Perform: a) Conduct Load Test on given DC Shunt Motor b) Discuss the starting current and No load current of the Motor c) Plot the performance Characteristics.	4
7.	LOAD TEST ON THREE PHASE INDUCTION MOTOR Activity to Perform: a) Conduct Load Test on given three phase squirrel cage Induction Motor. b) Discuss the starting current and No load current of the Motor c) Plot the performance Characteristics.	4

8.	SPEED CONTROL OF INDUCTION MOTOR USING VFD Activity to Perform: a) Make connections and Control the speed of the given single phase or three phase squirrel cage induction motor by VFD. b) Discuss the features and advantages of VFD.	4
9.	DIRECTION CONTROL OF DC MOTOR USING DRIVER IC L293D Activity to Perform: a) Interface L293D Motor Driver IC with Arduino to control Direction of rotation of Two DC Motors. b) Execute the Arduino program and observe the direction of rotation of Motors.	4
10.	TESTING OF STEPPER MOTOR DRIVE Activity to Perform: a) Interface suitable stepper motor driver with stepper motor. b) Test the operation of the driver circuit by observing the movement of the stepper motor.	4
	Assessment Test + Revision + Students Activity	20
	Total	75

Suggested List of Students Activity:

Activity 1: Study and understand the construction and working of DC Generator, Transformer and Alternators available in the Laboratory. Then each student shall write and submit the Report on the above topics.

Activity 2: Four students can be grouped as a batch to collect information about Industrial applications of various types of Electric Motors and submit as activity report. Reference books / website details/ Visited Industry details for collection of above information must be mentioned in the report itself.

1020233440	INDUSTRIAL DRIVES AND CONTROL	L	T	P	C
PRACTICUM		1	0	4	3

Text book for Reference:

1. B. L. Theraja and A. K. Theraja, A Textbook of Electrical Technology Volume - II (AC and DC Machines), Multicolour Edition, S. Chand & Co., 2005.
2. V K Mehta, Rohit Mehta, Principles of Electronics, 12 th Edition, S. Chand & Co., 2020.
3. B.N. Sarkar, Fundamentals of Industrial Drives, 1 st Edition, PHI Learning Pvt. Ltd., 2012.
4. Frank D. Petruzella, Programmable Logic Controllers, 6 th Edition, Indian Edition, Mc Graw Hill, 2023.

Web-based/Online Resources:

- https://nptel.ac.in/courses/108/104/108104140/#
- https://archive.nptel.ac.in/courses/108/105/108105155/
- https://archive.nptel.ac.in/courses/108/105/108105158/
- https://archive.nptel.ac.in/courses/108/105/108105132/

1020233440	INDUSTRIAL DRIVES AND CONTROL	L	T	P	C
PRACTICUM		1	0	4	3

Equipment / Facilities required to conduct the Practical Course.

S.No	Name of the Equipment's	Quantity Required
1.	MI Ammeter 0-5A, MI Voltmeter 0- 300V, ED Wattmeter 300V/5A, Digital Power Monitor, Lamp Load.	Each 1 No.
2.	5V/12V DC Power Supply Unit, LED, RGB LED and Resistors.	Each 1 No.
3.	230V/12V Transformer, Diodes, Filter Capacitor, Voltage Regulator IC, Resistors and CRO.	Each 1 No.
4.	3 Amps MCB and 30mA ELCB.	Each 1 No.
5.	5V RPS, Logic Gate ICs: 7408, 7432, 7404, 7400, 7402 & 7486, Toggle Switches, LEDs and Resistors.	Each 5 Nos.
6.	DC Shunt Motor with Starting and Loading arrangements.	1 No.
7.	Contactor and NO, NC Push buttons.	Each 1 No.
8.	3 Phase Squirrel Cage Induction Motor with Starting and Loading arrangements.	1 No.
9.	Variable Frequency Drive.	1 No.
10.	DC Motor, L293D Motor Driver IC and Arduino Shield.	1 No.
11.	Stepper Motor with Driver Shield.	1 No.
12.	Suitable range of MC Voltmeter and Ammeter for DC Motor.	Each 1 No.
13.	Suitable range of MI Voltmeter and Ammeter for AC Motor.	Each 1 No.
14.	Tachometer.	1 No.
15.	Digital Multimeter.	4 Nos.

Note:

- Sufficient number of Worktables to be provided in the laboratory to conduct experiments for students.

- Ensure Permanent wiring connections with suitable circuit breakers / Protective mechanism in the Worktables with proper safety measures.
- In addition to the above list sufficient quantities of consumable, Tools and Testing Instruments to be maintained.
- Charts on Electrical Safety and Procedure of First Aid to be displayed in the Laboratory.
- Necessary proper electrical safety arrangements should be done in the laboratory.
- Awareness about the First Aid for Electrical accidents should be given.

END SEMESTER EXAMINATIONS – PRACTICAL EXAM

Note:

All the exercises should be completed before the Board Practical Examinations. End Semester Practical examination should be conducted for all the exercises / experiments for 100 Marks. Students will be permitted to select any one exercise by lot or question paper supplied by the DOTE Exam section shall be used. The practical document prepared by the student should be submitted with a Bonafide Certificate.

SCHEME OF EVALUATION

PART	DESCRIPTION	MARKS
A	Aim & Apparatus Required	5
B	Circuit Diagram	20
C	Connections / Execution	25
D	Output / Result	10
E	Written Test	30
F	Viva Voce	10
	TOTAL	100

Note: For the written test 30 MCQ shall be asked from the theory portions.

1020233540	PRODUCTION DRAWING & MODELLING	L	T	P	C
PRACTICUM		1	0	4	3

Introduction:

Production Drawing & Modelling is a crucial aspect of design and manufacturing processes. It involves creating detailed technical drawings and three-dimensional models to communicate product specifications and aid in production. This discipline ensures precision, efficiency and consistency in manufacturing various products across industries in engineering and product design.

Course Objectives:

- Understand fundamental principles: Learn the foundational concepts, principles, and standards of production drawing and modelling, including geometric dimensioning and tolerance (GD&T), drafting conventions, and industry-specific guidelines.
- Develop technical drawing skills: Acquire proficiency in creating accurate and detailed technical drawings using CAD software, focusing on orthographic projections, isometric views, section views, and assembly drawings.
- Master 3D modelling techniques: Gain expertise in constructing three-dimensional models of objects and components using CAD software, emphasise solid modelling, surface modelling, parametric modelling, and assembly modelling.
- Interpret engineering documentation: Learn to interpret and analyse engineering drawings, specifications, and other technical documents to extract relevant information for manufacturing processes, including material specifications, geometric tolerances, and assembly instructions.

Course Outcomes:

On successful completion of this course, the student will be able to

CO1: Draw various sectional views of 2D assembly drawings manually as per BIS.

CO2: Create sectional views for 2D assembly drawing.

CO3: Create 3D modelling using CAD software module.

CO4: Interpret the drawing and symbols in the Engineering field.

1020233540	PRODUCTION DRAWING & MODELLING	L	T	P	C
PRACTICUM		1	0	4	3

CO5: Demonstrate proficiency in 3D modelling by creating and assembling machine components.

Pre-requisites:

DRAFTING PRACTICES

CO/PO Mapping

CO / PO	PO1	PO2	PO3	PO4	PO5	PO6	PO7
CO1	2	1		2			
CO2	2	1		2			
CO3	2	1		2			
CO4	2	1		2			
CO5	2	1		2			

Legend: 3-High Correlation, 2-Medium Correlation, 1-Low Correlation

Instructional Strategy:

- Utilise a blended approach with lectures on manual drawing fundamentals and CAD software introduction.
- Incorporate hands-on sessions for manual drawing practice and CAD software usage.
- Assignments focus on creating detailed drawings of machine parts, transitioning to CAD for 3D modelling, assembly, and printing components.
- Encourage peer collaboration and feedback.

1020233540	PRODUCTION DRAWING & MODELLING	L	T	P	C
PRACTICUM		1	0	4	3

Assessment Methodology:

	Continuous Assessment (40 marks)				End Semester Examination (60 marks)
	CA1	**CA2**	**CA3**	**CA4**	
Mode	Practical Test	Practical Test	Written Test Theory	Practical Test	Practical Examination
Portion	Drafting Practices and Solid modelling Practices (Ex 1 and 2)	Drafting Practices and Solid modelling Practices (Ex 3, and 4)	Theory Portions and Assembled views Manual Drawing (All Portions)	Drafting Practices and Solid modelling Practices. (All Exercises)	Drafting Practices and Solid modelling Practices. (All Exercises)
Duration	2 Periods	2 Periods	3 Hours	3 Hours	3 hours
Exam Marks	60	60	100	100	100
Converted to Marks	10	10	15	15	60
Marks	10		15	15	60
Tentative Schedule	7th Week	14th Week	15th Week	16th Week	

Note:

- **CA1 and CA2:** All the exercises/experiments should be completed as per the portions above and kept for the practical test. The students shall be permitted to select any one by lot for the test. The practical test should be conducted as per the scheme of evaluation as below. The marks awarded shall be converted to 10 Marks for each assessment test. Best of one will be considered for the internal assessment of 10 Marks.

Practical documents should be maintained for every experiment immediately after completion of the practice. The practical document should be submitted for the practical test. The same should be evaluated for 10 Marks for each exercise/experiment. The total marks awarded should be converted to 10 Marks for the practical test as per the scheme of evaluation as below.

The details of the documents to be prepared as per the instruction below.

Each exercise should be completed on the day of practice. The same shall be evaluated for 10 marks on the day or next day of practice before commencement of the next experiment.

The Assembled views for the exercises during Manual drawing practice should be submitted in the drawing sheet (4 Drawing sheet). The print out of the assembled view during drafting practices should be submitted (4 printout). The printout of the solid modelling practices should be submitted (4 printout). The 12 documents should be kept in a file with a Bonafide certificate.

The detailed date of the practices and its evaluations should be maintained in the course logbook. The log book and the practical documents should be submitted for the verification by the Flying Squad and DOTE Official.

SCHEME OF EVALUATION

Part	Description	Marks
PART A – Drafting Practices		
A	Command / Creation Procedure	10
B	2D View with Dimensions	15
PART B – Solid modelling Practices		
C	Creation Part Modelling	10
D	CAD Modelling (3D)	15
Practical Total		50
E	Practical Documents (As per the portions)	10
Total		60

1020233540	PRODUCTION DRAWING & MODELLING	L	T	P	C
PRACTICUM		1	0	4	3

- **CA 3:** Written Test for complete theory portions should be conducted for 100 Marks as per the question pattern below. The marks scored will be converted to 15 Marks for internal assessment.

Question pattern – Written Test Theory

Description		Marks	
Manual Assembled Drawing			
Part – A	**Two views of the Assemble Drawing.** Front view and Top View / Side View in the drawing sheet. (With or without section / Half section). (30 + 20 = 50 Marks). Any one exercise can be given by lot.	Front View - 30 Marks. Top View / Side View - 20 Marks.	50 Marks
Theory Portions			
Part – B	20 One Mark questions (MCQ) should be answered.	20 X 1 Mark	20 Marks
Part – C	Three Ten Marks questions should be answered from Six questions.	3 X 10 Marks	30 Marks
TOTAL			100 Marks

- **CA 4:** All the exercises/experiments should be completed and kept for the practical test. The students shall be permitted to select any one by lot for the test. The practical test should be conducted as per the scheme of evaluation below. After completion of all the exercises the practical test should be conducted as per End Semester Examination question pattern scheme of evaluation. The marks awarded should be converted to 15 Marks for the internal assessment.

1020233540	PRODUCTION DRAWING & MODELLING	L	T	P	C
PRACTICUM		1	0	4	3

SCHEME OF EVALUATION

Part	Description	Marks
PART A – Drafting Practices		
A	Command / Creation	10
B	2D View with Dimensions	15
C	Printout	5
PART B – Solid modelling Practices		
D	Creation Part Modelling	10
E	CAD Modelling (3D)	15
F	Assembly of the parts	20
G	Printout	5
H	Written test (Theory Portions only)	10
I	Viva Voce	10
TOTAL MARKS		**100**

Note: For the written test 10 MCQ shall be asked from the theory portions.

Syllabus contents

Theory Portion	
SECTIONAL VIEWS Sectioning - sectional views – representation of sectional plane – hatching – inclination – spacing – hatching large areas – hatching adjacent parts - full section – half section – types of half sections – conventional representation of materials in section. **GEOMETRIC DIMENSIONING AND TOLERANCES.** Importance of GD&T - Tolerance specification and interpretation - Tolerance symbols - Features - Datum plane and Axis - Shaft basis and hole basis system.	15

1020233540	PRODUCTION DRAWING & MODELLING	L	T	P	C
PRACTICUM		1	0	4	3

Material Condition Modifiers. Maximum Material Condition (MMC) - Least Material Condition (LMC) - Feature Control Frames	
Manual Drawing Practice	
Detailed drawings of the following machine components will be given to students to draw the assembled views. Only the assembled Front view (Without section / Full Section / Half Section) and Top view or Side view (Without section / Full Section / Half Section) with dimensions and Bill of materials in the Drawing Sheet. Note: All the exercises drawing sheet should be submitted for the model and end semester examination as a record of work done.	15
COMPUTER AIDED DRAFTING (CAD) PRACTICES	
PART A - Drafting Practices: 2D Drafting Practices - Draw the front view of the assembled drawing of the components with dimensions.	15
PART B - Solid modelling Practices: Detailed drawings of the machine components will be given to students to create the solid modelling and assemble using any CAD software in the computer and take the printout.	15
Machine Components for the Practical Exercises	
1. Sleeve and Cotter Joint. 2. Plummer Block. 3. Flange Coupling. 4. Bushed Bearing.	
Practice + Test + Revision	15

1020233540	PRODUCTION DRAWING & MODELLING	L	T	P	C
PRACTICUM		1	0	4	3

Suggested List of Students Activity:

- Students should practice production drawing with the GD&T representation.
- Modelling competitions can be arranged.

Text and Reference Books:

1. A beginner's guide to 3D modeling by Cameron Coward
2. Solidworks 2022 step by step guide by Amit Bhatt and Mark Wiley

Web-based/Online Resources:

- https://www.autodesk.in/campaigns/autocad-tytorials
- https://www.mycadsite.com/tutorials.html
- NPTEL Lecturers

Equipment / Facilities required to conduct the Practical Course.

1. Personal computer – 30 Nos.
2. Printer – 1 No.
3. Required Software: CAD Package/ Parametric Software packages– Sufficient to the strength.

1020233540	PRODUCTION DRAWING & MODELLING	L	T	P	C
PRACTICUM		1	0	4	3

END SEMESTER EXAMINATIONS – PRACTICAL EXAM

Note: All the exercises should be completed before the Board Practical Examinations. End Semester Practical examination should be conducted for all exercises for 100 Marks as per the pattern. Students will be permitted to select any one exercise by lot or question paper supplied by the DOTE Exam section shall be used.

Practical documents should be submitted for the End Semester Examination with a bonafide certificate.

SCHEME OF EVALUATION

Part	Description	Marks
PART A – Drafting Practices		
A	Command / Creation	10
B	2D View with Dimensions	15
C	Printout	5
PART B – Solid modelling Practices		
D	Creation Part Modelling	10
E	CAD Modelling (3D)	15
F	Assembly of the parts	20
G	Printout	5
H	Written test (Theory Portions only)	10
I	Viva Voce	10
TOTAL MARKS		**100**

Note: For the written test 10 MCQ shall be asked from the theory portions.

1020233540	PRODUCTION DRAWING & MODELLING	L	T	P	C
PRACTICUM		1	0	4	3

EXERCISE DRAWINGS

1020233540	PRODUCTION DRAWING & MODELLING	L	T	P	C
PRACTICUM		1	0	4	3

Sleeve and cotter joint

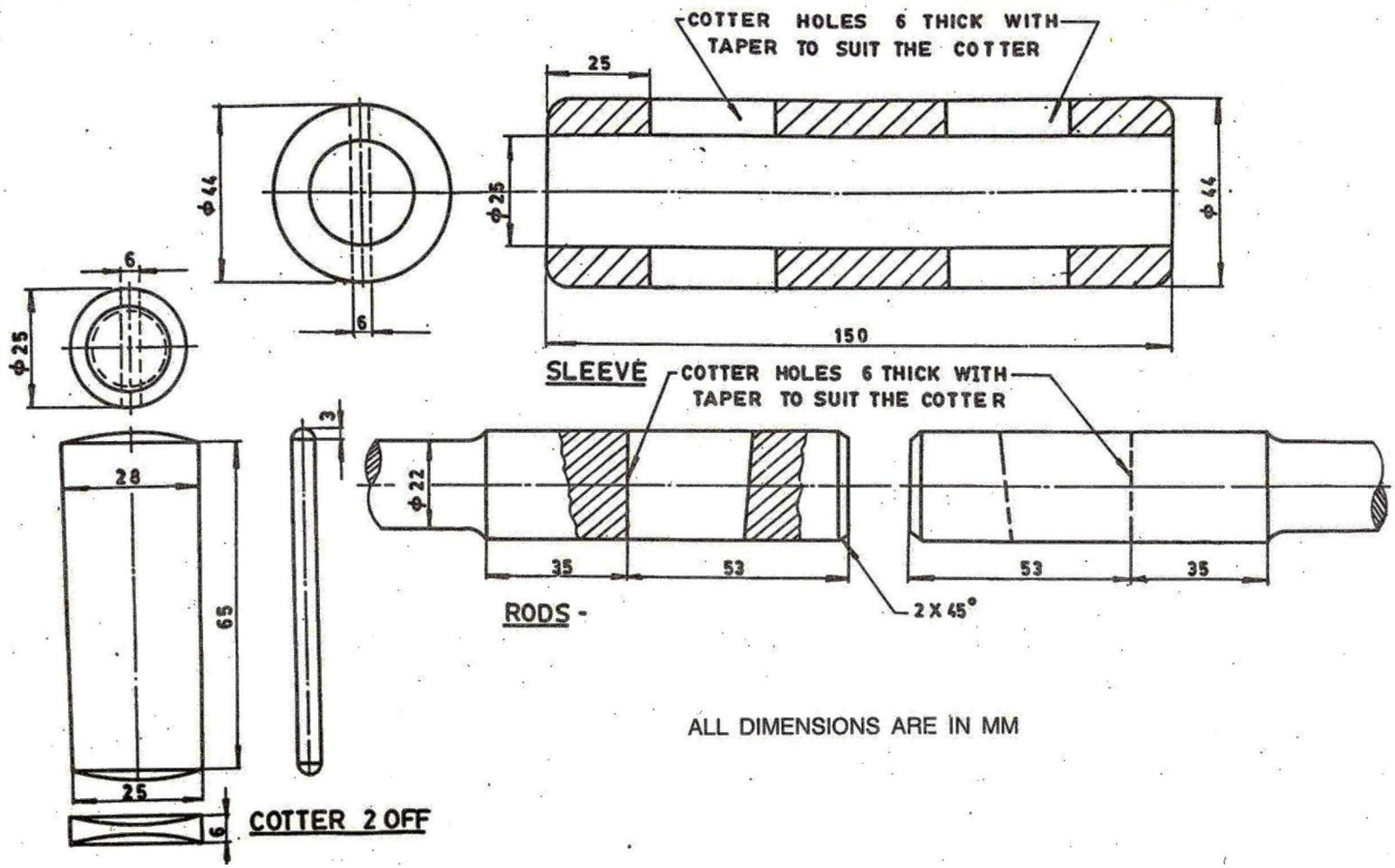

1020233540	PRODUCTION DRAWING & MODELLING	L	T	P	C
PRACTICUM		1	0	4	3

Plummer Block (Pedestal Bearing)

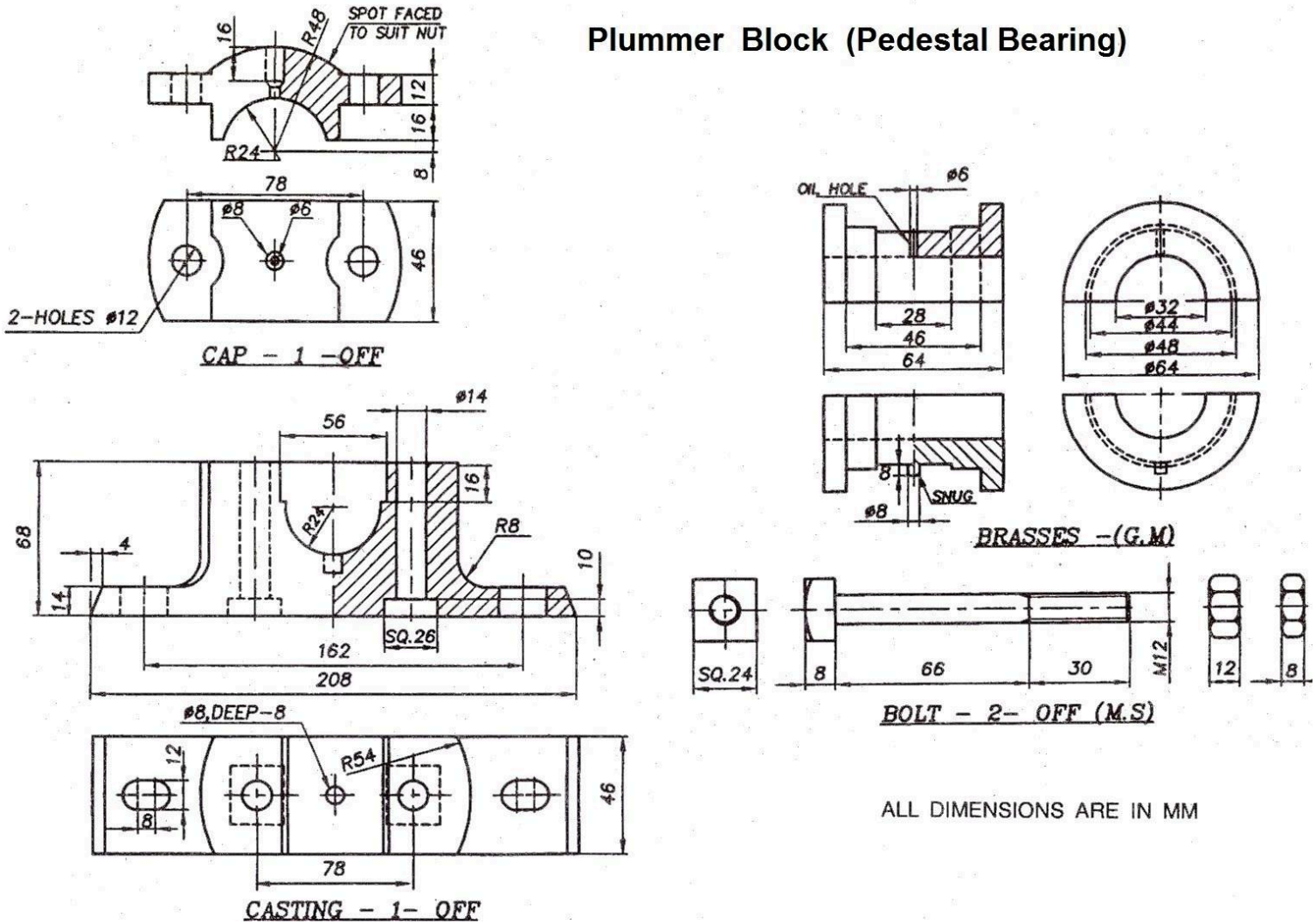

ALL DIMENSIONS ARE IN MM

1020233540	PRODUCTION DRAWING & MODELLING	L	T	P	C
PRACTICUM		1	0	4	3

Protected Type Flange Coupling

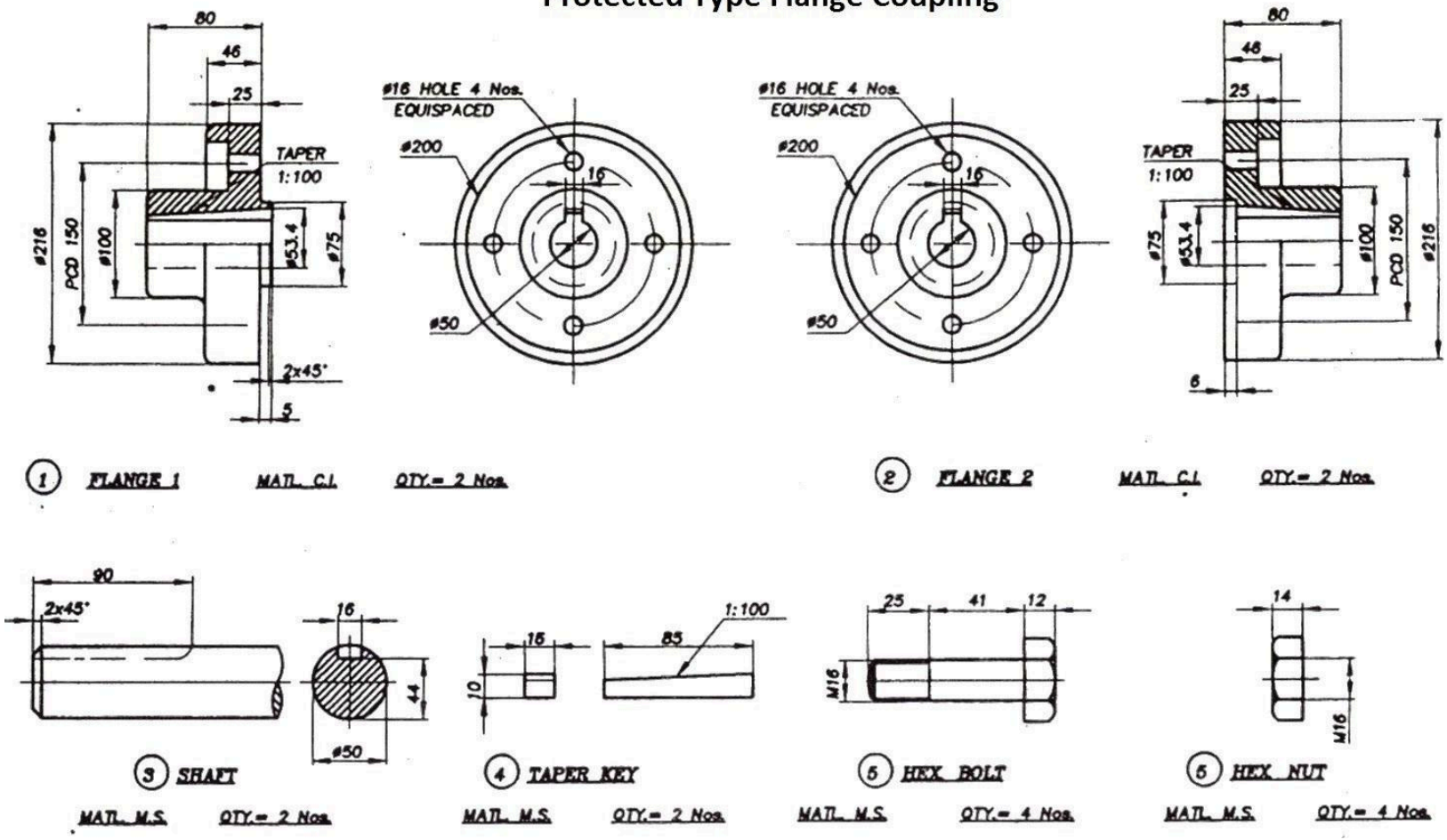

1020233540	**PRODUCTION DRAWING & MODELLING**	L	T	P	C
PRACTICUM		1	0	4	3

BUSHED BEARING

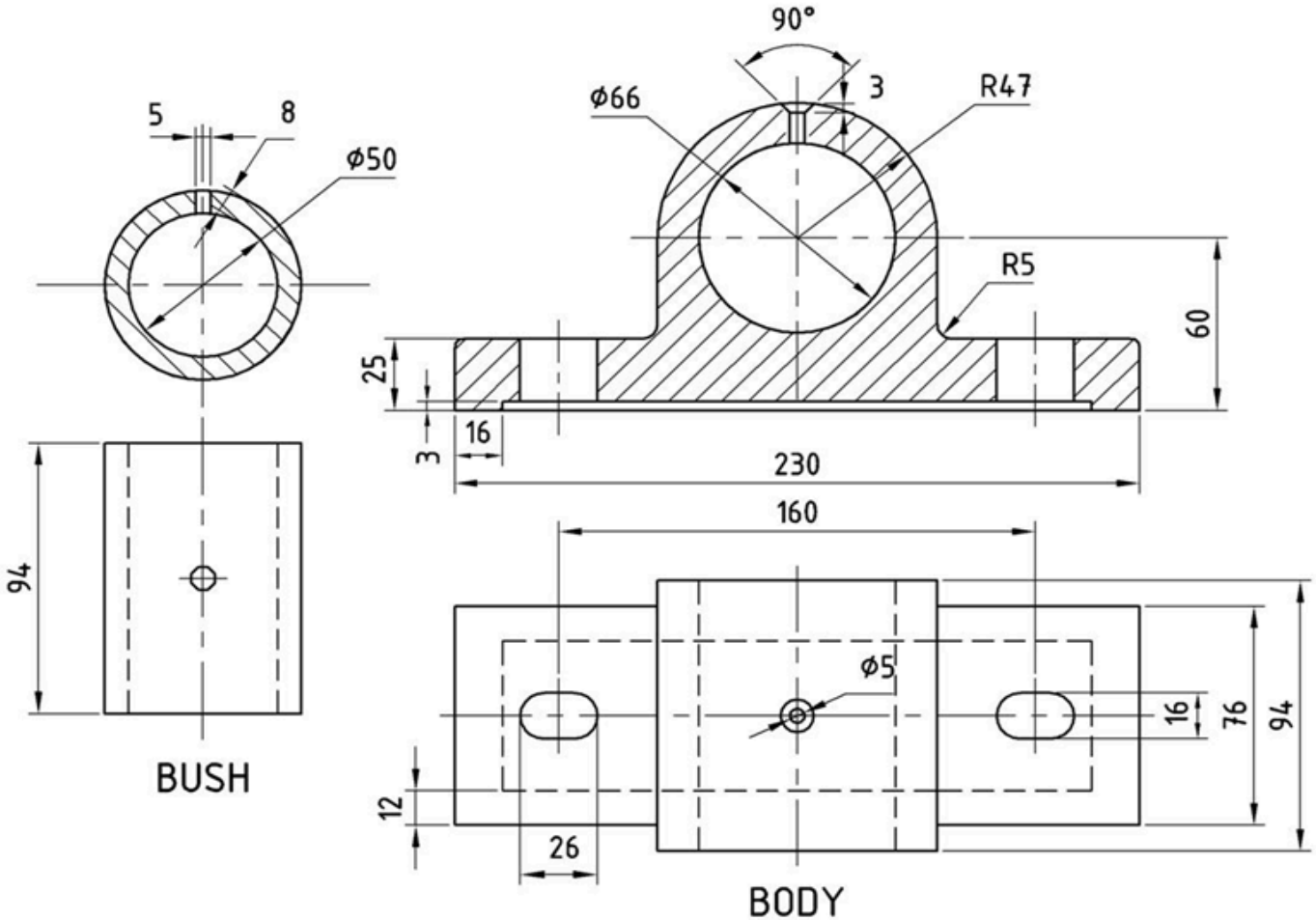

1020233640	MACHINE TOOL TECHNOLOGY	L	T	P	C
PRACTICUM		1	0	4	3

Introduction:

To meet out Globalization, technological advances and to sustain ourselves we have to explore the knowledge about machine tools covering the various operations and skill sets required for the development of a nation and its people.

Course Objectives:

1. Expose to the Concept and Basic Mechanics of Metal Cutting
2. Familiarise with working of Standard Machine Tools such as Lathe and Milling.
3. Familiarise with the working of the Grinding Process.

Course Outcomes:

CO1: Discuss with various mechanics of metal cutting and operations performed in Lathe
CO2: Illustrate various milling operations
CO3:Describe the various grinding processes.
CO4: Manufacture of gears using milling machine
CO5: Perform finishing operations using grinding machines.

Pre-requisites:
Applied science, Basic workshop practice

1020233640	MACHINE TOOL TECHNOLOGY	L	T	P	C
PRACTICUM		1	0	4	3

CO/PO Mapping

CO / PO	PO1	PO2	PO3	PO4	PO5	PO6	PO7
CO1	3			3			
CO2	3			3			
CO3	3			3			
CO4	3			3			
CO5	3			3			

Legend: 3-High Correlation, 2-Medium Correlation, 1-Low Correlation

Instructional Strategy:

- Engage and Motivate: Instructors should actively engage students to boost their learning confidence.
- Real-World Relevance: Incorporate relatable, real-life examples and engineering applications to help students understand and appreciate course concepts.
- Interactive Learning: Utilize demonstrations and plan interactive student activities for an engaging learning experience.
- Application-Based Learning: Employ a theory-demonstrate-practice-activity strategy throughout the course to ensure outcome-driven learning and employability.
- Simulation and Real-World Practice: Conduct demonstrations and hands-on activities in a simulated environment, transitioning to real-world scenarios when possible.
- Encourage Critical Analysis: Foster an environment where students can honestly assess experiment outcomes and analyze potential sources of error in case of discrepancies

1020233640	MACHINE TOOL TECHNOLOGY	L	T	P	C
PRACTICUM		1	0	4	3

Assessment Methodology:

	Continuous Assessment (40 marks)				End Semester Examination (60 marks)
	CA1	**CA2**	**CA3**	**CA4**	
Mode	Practical Test	Practical Test	Written Test Theory	Practical Test	Practical Examination
Portion	Cycle I Exercises 50% Exercises	Cycle II Exercises Another 50% Exercises	All Units	All Exercises	All Exercises
Duration	2 Periods	2 Periods	3 Hours	3 Hours	3 hours
Exam Marks	60	60	100	100	100
Converted to Marks	10	10	15	15	60
Marks	10		15	15	60
Tentative Schedule	7th Week	14th Week	15th Week	16th Week	

Note:

- **CA1 and CA2:** All the exercises/experiments should be completed as per the portions above and kept for the practical test. The students shall be permitted to select any one by lot for the test. The practical test should be conducted as per the scheme of evaluation as below. The marks awarded shall be converted to 10 Marks for each assessment test. Best of one will be considered for the internal assessment of 10 Marks.

  Practical documents should be maintained for every exercise / experiment immediately after completion of the practice. The practical document should be submitted for the practical test. The same should be evaluated for 10 Marks for each exercise/experiment.

The total marks awarded should be converted to 10 Marks for the practical test as per the scheme of evaluation as below.

The details of the documents to be prepared as per the instruction below.

Each exercise should be completed on the day of practice. The same shall be evaluated for 10 marks on the day or next day of practice before commencement of the next exercise.

This documentation can be carried out in a separate notebook or printed manual or a file with documents. Students should write the procedure and draw the sketch manually.

The detailed date of the practices and its evaluations should be maintained in the course logbook. The log book and the practical documents should be submitted for the verification by the Flying Squad and DOTE Official.

SCHEME OF EVALUATION

PART	DESCRIPTION	MARKS
A	Aim / Tools required	5
B	Preparation / Procedure	20
C	Operation / Machining / Measurements	25
TOTAL		50
D	Practical Documents (As per the portions)	10
		60

- **CA 3:** Written Test for complete theory portions should be conducted for 100 Marks as per the question pattern below. The marks scored will be converted to 15 Marks for internal assessment.

1020233640	MACHINE TOOL TECHNOLOGY	L	T	P	C
PRACTICUM		1	0	4	3

Question pattern – Written Test Theory

Description		Marks	
Part – A	30 MCQ from the complete theory portions.	30 X 1 Mark	30 Marks
Part – B	Seven Questions to be answered out of 10 Questions.	7 X 10 Marks	70 Marks
TOTAL			100 Marks

- **CA 4:** All the exercises/experiments should be completed and kept for the practical test. The students shall be permitted to select any one by lot for the test. The practical test should be conducted as per the scheme of evaluation below. After completion of all the exercises the practical test should be conducted as per End Semester Examination question pattern scheme of evaluation. The marks awarded should be converted to 15 Marks for the internal assessment.

SCHEME OF EVALUATION

Model Practical Examination and End Semester Examination - Practical Exam

PART	DESCRIPTION	MARKS
A	Aim / Tools required	5
B	Preparation / Procedure	20
C	Operation / Machining / Measurements	25
D	Finish / Dimensions	10
E	Written Test (Theory portions)	30
F	Viva voce	10
	TOTAL	100

Note: For the written test 30 MCQ shall be asked from the theory portions.

1020233640	MACHINE TOOL TECHNOLOGY	L	T	P	C
PRACTICUM		1	0	4	3

Syllabus Contents

Theory Portion	Period
Chapter 1: Theory of Metal Cutting: Chip Formation, Orthogonal Cutting- Oblique Cutting - Tool Geometry – Tool nomenclature – Cutting tool materials - cutting parameters. Lathe - Centre Lathe: Introduction - specifications –machining operations done on lathe. **Chapter 2:** Milling - Milling cutters classification only-Milling operations-types-straddle milling - gang milling.Indexing-Indexing plate – Indexing methods - simple indexing, differential indexing.Generating Process: gear shaper - gear hobbing - principle of operation only. **Chapter 3:** Grinding: Grinding Process – Cylindrical Grinding, Surface Grinding, Centre less Grinding-principles of operation only. – grinding wheels – abrasives - natural and artificial diamond wheels - types of bonds - grit, grade and structure of wheels - wheel shapes and sizes - standard marking systems of grinding wheels - selection of grinding wheel - mounting of grinding wheels - Dressing and Truing of wheels - Balancing of grinding wheels.	15
Practical Exercises	
I. LATHE 1. Grooving and Taper Turning. 2. LH Thread cutting. 3. RH Thread cutting. 4. Bush: Turning & Drilling 5. Eccentric Turning. **II. MILLING MACHINE** 6. Make Spur Gear using milling machine by simple Indexing 7. Make helical gear using milling machine	50

1020233640	MACHINE TOOL TECHNOLOGY	L	T	P	C
PRACTICUM		1	0	4	3

III. GRINDING 8. Grind a plain surface using surface Grinder 9. Make progressive type plug gauge using cylindrical grinding machine 10. Make a turning tool / milling cutter using a tool and cutter grinder.	
Test + Revision	10
Total	75

Cycle - I **Exercise 1, 2, 3, 6, 8 - 5 Exercises**

Cycle - II **Exercise 4, 5, 7, 9, 10 - 5 Exercises**

Suggested List of Students Activity:

1. Observe the Lathe machine in the institute and study its specifications. List the possible operations that can be done on that machine.
2. Study different reciprocating machines available and draw the line sketch to study the working principle.
3. Study the types of grinding wheels available for industrial applications. Classify the abrasive materials and its properties. .

Text and Reference Books:

1. CHAPMAN W. A. J - Workshop Technology Part 1-5 th edition- CBS-2001.
2. CHAPMAN W. A. J - Workshop Technology Part 2-4 th Edition-CBS-2007.
3. R S Khurmi - A Textbook Of Workshop Technology : Manufacturing Processes -16 TH Edition- S Chand & Company-2021.

Web-based Online Resources:

- https://www.youtube.com/watch?v=6ISddRRHAhA - Introduction to Manufacturing Process Technology - NPTEL IIT Kanpur.
- https://www.youtube.com/watch?v=B8w-0Oi0Yf4 - Gear Manufacturing - NPTEL - IIT Kharagpur.
- https://www.youtube.com/watch?v=kb0RowB8Myo - Introduction of Machining Processes- NPTEL IIT Kanpur.

1020233640	MACHINE TOOL TECHNOLOGY	L	T	P	C
PRACTICUM		1	0	4	3

END SEMESTER EXAMINATION – PRACTICAL EXAM

Note:

All the exercises should be given in the question paper and students are allowed to select by a lot or the question paper allotted from the DOTE shall be used.

Practical document should be submitted for the examination with a bonafide certificate.

SCHEME OF EVALUATION

PART	DESCRIPTION	MARKS
A	Aim / Tools required	5
B	Preparation / Procedure	20
C	Operation / Machining / Measurements	25
D	Finish / Dimensions	10
E	Written Test (MCQ question)	30
F	Viva voce	10
	TOTAL	100

Note: For the written test 30 MCQ shall be asked from the theory portions.

1020233640	MACHINE TOOL TECHNOLOGY	L	T	P	C
PRACTICUM		1	0	4	3

Exercises drawing:

All the dimensions are in mm.

I. LATHE

Make the following jobs in the lathe. Raw material :_____ M.S. Round Rod

1. Grooving and Taper Turning.

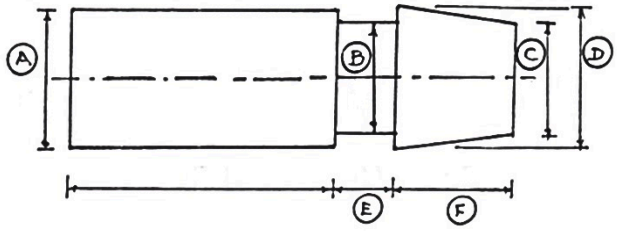

2. LH Thread cutting.

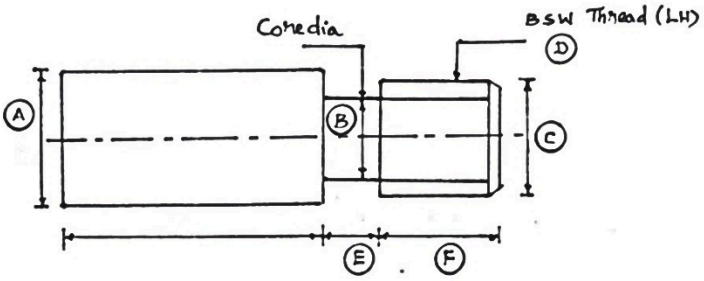

3. RH Thread cutting.

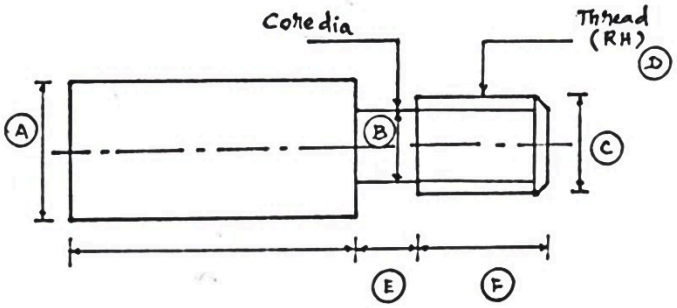

4. Bush: Turning & Drilling

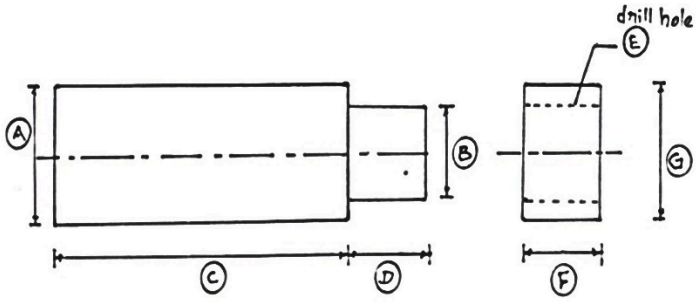

5. Eccentric Turning.

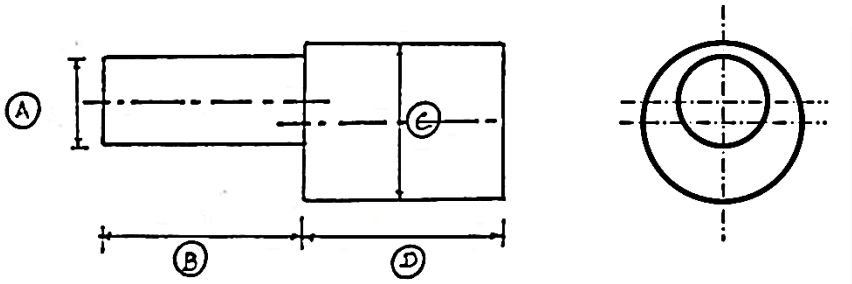

II. MILLING

Make the following jobs in the milling machine.

Raw material :_____ M.S. Round Rod

6. Make Spur Gear using milling machine by simple Indexing

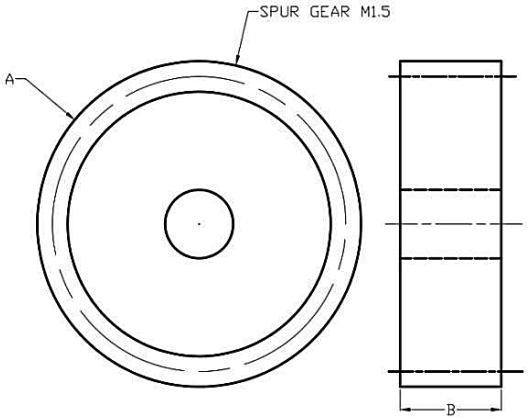

7. Make helical gear using milling machine

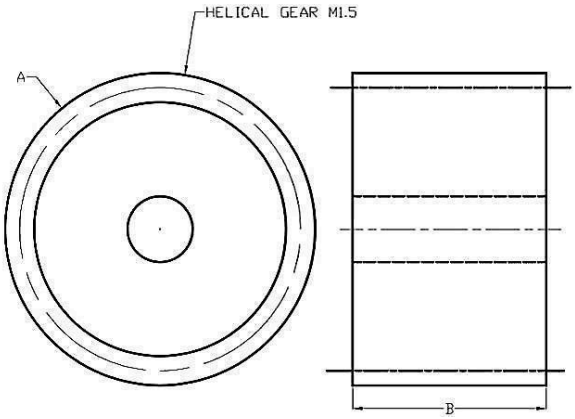

III. GRINDING

Make the following jobs in the Grinding machine using given raw material.

8. Grind a plain surface using surface Grinder

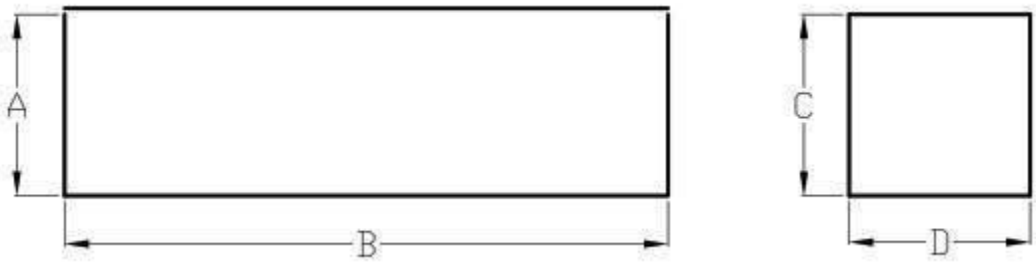

9. Make progressive type plug gauge using cylindrical grinding machine

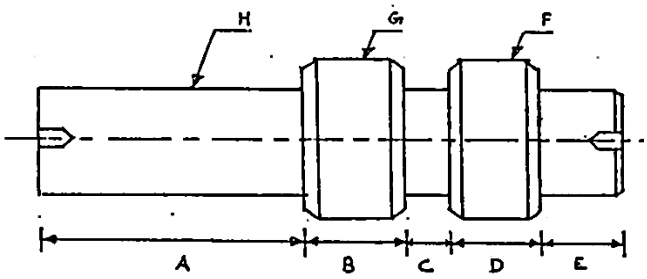

10. Make a turning tool / milling cutter using tool and cutter grinder.

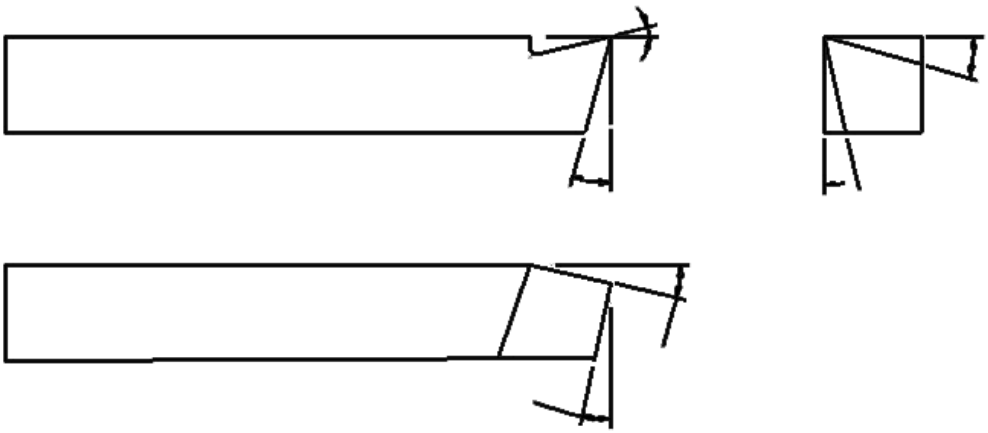

List of Equipments Required

Sl. No.	Name of the Machine / Equipment / Instrument	Quantity Required
1	Lathe	10 Nos.
2	Universal Milling Machine	2 Nos.
3	Surface Grinding Machine	1 No.
4	Cylindrical Grinding Machine	1 No.
5	Tool and Cutter Grinding Machine	1 No.
6	Safety Glasses	10 Nos.
7	Tools and Measuring Instruments	Sufficient Quantity
8	Consumables	Sufficient Quantity

1020234110	ADVANCED MANUFACTURING TECHNOLOGY	L	T	P	C
THEORY		3	0	0	3

Introduction:

Use of innovative technologies to create existing products and the creation of new products. Advanced manufacturing can include production activities that depend on information, automation, computation, software, sensing, and networking

Course Objectives:

- Explain the different methods of plastic manufacturing processes
- Explain the various concepts of modern machining, super finishing process and surface treatment
- To make acquainted the various unconventional manufacturing processes
- Write part program for manufacturing components in CNC machines
- Explain the rapid prototyping technologies in manufacturing

Course Outcomes:

On successful completion of this course, the student will be able to

CO1: Describe the various methods of plastic manufacturing

CO2: Explain the modern machining processes, super finishing processes and various surface treatment methods

CO3: Describe the unconventional Machining processes

CO4: Explain the CNC Machines and ability to apply "G codes" and "M codes in CNC programming

CO5: Apply the rapid prototyping technologies in manufacturing

Pre-requisites:

Production Technology, Machine Tools, Metal Cutting, Computer applications

1020234110	ADVANCED MANUFACTURING TECHNOLOGY	L	T	P	C
THEORY		3	0	0	3

CO/PO Mapping

CO / PO	PO1	PO2	PO3	PO4	PO5	PO6	PO7
CO1	2	2	1				
CO2	2	2	1				
CO3	2	3	1				
CO4	2	2	1				
CO5	2	2	1				

Legend: 3-High Correlation, 2-Medium Correlation, 1-Low Correlation

Instructional Strategy:

- Engage and Motivate: Teachers should actively engage students to boost their learning confidence
- To help students learn and appreciate numerous concepts and principles in each area, teachers should provide examples from daily life, realistic situations, and real-world engineering and technological applications.
- The demonstration can make the subject exciting and foster in the students a scientific mindset. Student activities should be planned on all the topics.
- Throughout the course, a theory-demonstrate-practice-activity strategy may be used to ensure that learning is outcome- and employability-based.
- Simulation and Real-World Practice: Conduct demonstrations and hands-on activities in a simulated environment, transitioning to real-world scenarios when possible.

1020234110	ADVANCED MANUFACTURING TECHNOLOGY	L	T	P	C
THEORY		3	0	0	3

Assessment Methodology

	Continuous Assessment (40 marks)				End Semester Examination (60 marks)
	CA1	**CA2**	**CA3**	**CA4**	
Mode	Written test (Two units)	Written test (Another Two units)	Quiz MCQ (Online / Offline)	Model Examination	Written Examination
Duration	2 Periods	2 Periods	1 Hour	3 Hours	3 Hours
Exam Marks	50	50	60	100	100
Converted to	15	15	5	20	60
Marks	15		5	20	60
Tentative Schedule	6th Week	12th Week	13-14th Week	16th Week	

CA1 and CA2: Assessment written test should be conducted for 50 Marks for two units. The marks scored will be converted to 15 Marks. Best of one will be considered for the internal assessment of 15 Marks.

CA1and CA2, Assessment test should be conducted for two units as below.

Answer five questions (5 X 10 Marks = 50 Marks).

Eight questions will be asked, students should write Five questions. Each unit Four questions can be asked. Each question may have subdivisions. Maximum two subdivisions shall be permitted.

CA3: 60 MCQ can be asked by covering the entire portion. It may be conducted by Online / Offline. The answer scripts of every student (online / offline) for this assessment should be kept for records and future verification. The marks scored should be converted to 5 marks for the internal assessment.

1020234110	ADVANCED MANUFACTURING TECHNOLOGY	L	T	P	C
THEORY		3	0	0	3

CA4: Model examination should be conducted as per the end semester question pattern. The marks should be converted to 20 marks for the internal assessment.

Question Pattern:

Answer Ten questions by selecting two questions from each unit. Each question carries 10 marks each.

Four questions will be asked from every unit, students should write any two questions. The question may have two subdivisions only.

Syllabus Contents

Unit I	**Types of plastics and processing of plastics**	
Types of Plastics: Engineering plastics – thermosets – comparison of thermoplastic and thermosetting plastics - composite - structural foam, elastomers - polymer alloys and liquid crystal polymers. **Processing of Plastics** Extrusion - single screw extrusion - twin screw extruders and types - Injection moulding types: Plunger type - Reciprocating screw injection - structural foam injection mould - sandwich moulding - gas injection moulding – calendaring and rotational moulding. Design consideration for plastic components.		9
Unit II	**Modern Machining ,Super finishing and Surface treatment processes**	
Modern Machining Processes: Precision and ultra precision machining - Micro and nano machining and High-speed Machining – hot machining-basic principles, working, applications, advantages **Super finishing processes :** introduction– working principle of Honing – lapping –burnishing – polishing –buffing – advantages - applications		9

1020234110	ADVANCED MANUFACTURING TECHNOLOGY	L	T	P	C
THEORY		3	0	0	3

Surface treatment processes: Introduction – working principle – surface hardening - shot peening - galvanizing – powder coating - thermal spraying - Vapour deposition Processes types - Chemical Vapour Deposition (CVD) – Physical Vapour Deposition (PVD) - sputtering – Electroplating – cladding – hot dipping – painting - advantages – applications.		
Unit III	**Unconventional Machining Processes**	
Introduction – classification - construction and working principle of abrasive jet machining (AJM) – water jet machining (WJM) – ultrasonic machining (USM) – electrical discharge machine (EDM) - electron beam machining (EBM) – laser beam machining (LBM) – plasma arc machining (PAM) – Chemical Machining (CHM) – Electro Chemical Machining (ECM) -advantages – disadvantages and applications.		8
Unit IV	**CNC Machines and CNC Programming**	
CNC machines: Numerical control – definition – working principle of a CNC system - advantages of CNC machines – difference between NC and CNC – construction and working principle of turning centre – construction and working principle of machining centre - machine axes conventions turning centre and machining centre – coordinate measuring machine (CMM) – construction and working principle. **CNC Programming:** Introduction – Cartesian coordinate system – Polar coordinate system –Absolute and incremental positioning – Purpose of G and M codes. – CNC program. Procedure - Homing position – Offset setting -Work offset setting procedure – Tool offset - CNC turning program using linear interpolation and circular interpolation.– CNC milling program using linear interpolation and circular interpolation - . compensation		11

1020234110	ADVANCED MANUFACTURING TECHNOLOGY	L	T	P	C
THEORY		3	0	0	3

Unit V	Rapid Prototyping	
Introduction - Classification –subtractive – additive – advantages and applications – materials- Working Principles, Methods, Stereolithography, Laser Sintering, Fused Deposition Method, 3D printing - Working Principle - Applications and Limitations, Rapid tooling, Overview of other techniques in rapid manufacturing.		8
	TOTAL HOURS	45

Suggested List of Students Activity:

- Presentation/Seminars by students on any recent technological developments based on the course
- Online MCQ have to be conducted for all the five units.
- Blended learning activities to explore the recent trends and developments in the field.

Text and Reference Books:

1. V. K. Jain, Advanced Machining Processes, 1 st edition , Allied Publications,2010.
2. Mikell P. Groover , Automation, Production Systems, and Computer- Integrated Manufacturing, 3 rd edition, Pearson Education Asia,2008.
3. P. Radhakrishnan, S. Subramanyam, CAD/CAM/CIM,2 nd edition, New Age International,2008.

Web-based/Online Resources:

- https://archive.nptel.ac.in/courses/112/107/112107078/
- https://onlinecourses.nptel.ac.in/noc24_me72/preview

END SEMESTER QUESTION PATTERN - Theory Exam

Duration: 3 Hrs. **Max. Marks: 100**

Note: Answer Ten questions by selecting two questions from each unit. Each question carries 10 marks each.

Instruction to the Question Setters

Four questions will be asked from every unit, students should write any two questions for 10 marks. The question may have two subdivisions only.

1020234230	FLUID MECHANICS	L	T	P	C
PRACTICUM		2	0	2	3

Introduction:

The principles of fluid mechanics play a vital role in various aspects of our daily lives, influencing everything from the functioning of essential machines to the natural phenomena that shape our world. Understanding the significance of fluid mechanics helps us appreciate its impact on diverse fields. It is a cornerstone of modern engineering and science, with profound implications for numerous aspects of our lives. Its principles enable advancements in technology, contribute to environmental sustainability, and enhance our understanding of the natural world.

Course Outcomes:

On successful completion of this course, the student will be able to

CO1: Describe the measurement of fluid pressure and its applications.

CO2: Measure the flow rate of fluid by using venturi meter and orifice meter.

CO3: Compute the friction factor for the pipeline.

CO4: Analyse the performance of turbines.

CO5: Evaluate the performance of pumps

Pre-requisites:

Mathematical skills, Mechanics.

CO/PO Mapping

CO / PO	PO1	PO2	PO3	PO4	PO5	PO6	PO7
CO1	3	1	-	3			
CO2	3	1	-	3			
CO3	3	1	-	3			
CO4	3	1	-	3			
CO5	3	1	-	3			

Legend: 3-High Correlation, 2-Medium Correlation, 1-Low Correlation

1020234230	FLUID MECHANICS	L	T	P	C
PRACTICUM		2	0	2	3

Instructional Strategy:

- Engage and Motivate: Instructors should actively engage students to boost their learning confidence.
- Real-World Relevance: Incorporate relatable, real-life examples and engineering applications to help students understand and appreciate course concepts.
- Interactive Learning: Utilize demonstrations and plan interactive student activities for an engaging learning experience.
- Application-Based Learning: Employ a theory-demonstrate-practice-activity strategy throughout the course to ensure outcome-driven learning and employability.
- Encourage Critical Analysis: Foster an environment where students can honestly assess experiment outcomes and analyze potential sources of error in case of discrepancies

Assessment Methodology:

	Continuous Assessment (40 marks)				**End Semester Examination (60 marks)**
	CA1	**CA2**	**CA3**	**CA4**	
Mode	Written Test Theory (Any Two Units)	Written Test Theory (Another Two Units)	Practical Test (All Exercises)	Written Test (Complete Theory Portions)	Written Examination (Complete Theory Portions)
Duration	2 Periods	2 Periods	3 Hours	3 Hours	3 Hours
Exam Marks	50	50	100	100	100
Converted to	10	10	15	15	60
Marks	10		15	15	60
Tentative Schedule	6th Week	12th Week	15th Week	16th Week	

1020234230	FLUID MECHANICS	L	T	P	C
PRACTICUM		2	0	2	3

Note:

- **CA1 and CA2:** Assessment written test should be conducted for 50 Marks. The marks scored will be converted to 10 Marks for each test. Best of one will be considered for the internal assessment of 10 Marks.

  CA1 and CA2, Assessment written test should be conducted for two units as below.

  Answer any Five questions. (5 X 10 Marks = 50 Marks).

  Eight questions will be asked, students should write Five questions.

  Each unit Four questions can be asked. Each question may have subdivisions. Maximum two subdivisions shall be permitted.

- **CA 3:** All the exercises/experiments should be completed and kept for the practical test. The students shall be permitted to select any one experiment by lot for the test. The practical test should be conducted as per the scheme of evaluation as below. The marks awarded for 100 marks will be converted to 15 Marks for the internal mark.

  Practical documents should be maintained for every exercise / experiment immediately after completion of the practice. The practical document should be submitted for the practical test. Each exercise/experiment should be evaluated for 10 Marks. The total marks awarded should be converted to 30 Marks for the practical test as per the scheme of evaluation as below.

  The details of the practical documents to be prepared as per the instruction below.

  Each experiment observation and calculations should be completed on the day of practice. The same shall be evaluated for 10 marks on the day or next day of practice before commencement of the next exercise.

  This documentation can be carried out in a separate notebook or a printed manual or a file with documents. The student should write the reading and calculations and the result and graph should be prepared manually.

  The evaluated practical document should be submitted for the Practical Test (CA3). The mark scored by the students should be converted to 30 marks. The same should be included as per the allocation in the practical test.

1020234230	FLUID MECHANICS	L	T	P	C
PRACTICUM		2	0	2	3

The detailed date of the practices and its evaluations should be maintained in the course logbook. The log book and the practical documents should be submitted for the verification by the Flying Squad and DOTE Official.

SCHEME OF EVALUATION - Practical Test

Sl.No.	Description	Marks
A	Aim / Apparatus required	10
B	Procedure / Observation / Tabular coloumn	20
C	Formula / Calculation	20
D	Result / Graph	10
E	Practical document (All Experiments)	30
F	Viva Voce	10
Total		100

CA4: Model examination should be conducted for complete theory portions as per the end semester question pattern. The marks awarded should be converted to 15 marks for the internal assessment.

Question Pattern:

Answer Ten questions by selecting two questions from each unit. Each question carries 10 marks each.

Four questions will be asked from every unit, students should write any two questions. The question may have two subdivisions only.

1020234230	FLUID MECHANICS	L	T	P	C
PRACTICUM		2	0	2	3

Syllabus Contents

Unit I	**FLUID AND FLUID PROPERTIES**	
Theory: Concept and classification of fluid, Properties of fluid - Density - Specific weight - Specific volume - Specific gravity - Viscosity - Surface tension - Cohesion & Adhesion – Capillarity - Bulk modulus of elasticity - Vapor Pressure - Description and Simple problems.		5
Practical: 1. Demonstrate various fluid properties viscosity, surface tension, cohesion & Adhesion and capillarity.		2
Unit II	**PRESSURE MEASURING DEVICES**	
Theory: Pressure head- atmospheric gauge and vacuum pressure – Classification of pressure measuring devices - Working and application of pressure measuring devices: Piezometer- Simple U tube manometers – Differential U tube manometers – problems - Pressure Gauges - Description.		5
Practical: 2. Measure the fluid pressure using a simple manometer and pressure gauge. Find the pressure difference using differential manometer.		3
Unit III	**FLUID KINEMATICS & FLUID DYNAMICS**	
Theory: Fluid Kinematics: Streamline, path line and streak lines and stream tube, classification of fluid flows-Reynolds number, steady & unsteady, uniform, non-uniform, laminar, turbulent, rotational, and irrotational flows-equation of continuity for one dimensional flow. Fluid Dynamics: Energies of fluid-Bernoulli's equations for flow along a streamline - Description and simple problems - Applications of Bernoulli's theorem - Venturimeter and Orificemeter - Description.		8

1020234230	FLUID MECHANICS	L	T	P	C
PRACTICUM		2	0	2	3

Practical: 3. Verify Bernoulli's theorem. 4. Measure the discharge of the fluid flow using venturi meter or Orifice Meter.		6
Unit IV	**FLOW THROUGH PIPES**	
Theory: Introduction to pipe and pipe flow - Major and minor losses - Reynold's experiment, friction factor, Darcy's and Chezy's equations - Description only, Moody's chart- Water hammer and cavitation, its cause, effect, and remedies.		4
Practical: 5. Find the friction factor for the given pipeline.		3
Unit V	**HYDRAULIC MACHINES**	
Theory: Reciprocating Pump: classifications - single and Double Acting Reciprocating Pump - Working - Discharge, coefficient of discharge, Air vessels. Centrifugal Pump: Classification - working of Single stage Centrifugal Pump - Main components of centrifugal pump - head of pump - priming - self priming – pumps in series & parallel - losses in centrifugal pumps - selection of pump. Hydraulic Turbines: Introduction - Classification of turbines, impulse turbine - construction and working of impulse turbine - reaction turbines - construction and working of Francis turbine and Kaplan turbine - draft tube and its types – surge tank - selection of hydraulic turbines.		8
Practical: 6. Perform a test on the reciprocating pump or centrifugal pump test rig and find the efficiency. 7. Perform a test on a hydraulic turbine test rig and find the efficiency.		6
	Test + Revision	10
	TOTAL HOURS	60

1020234230	FLUID MECHANICS	L	T	P	C
PRACTICUM		2	0	2	3

Suggested List of Students Activity:

- Compare the following liquids concerning their density (for the same mass, compare the volume) (1) Petrol (2) Water (3) Edible oil (4) Caster oil (5) Mercury
- Compare the following liquids concerning their viscosity (for the same temperature, compare the velocity) (1) Petrol (2) Water (3) Edible oil (4) Caster oil (5) Mercury
- Calculate the water weight when your home's water tank is completely filled with water.
- Observe the working of a Hydraulic Jack and relate it with Pascal's law.
- Observe the discharge water condition from a pipe at the time of car washing with a nozzle and without a nozzle and explain the difference considering Bernoulli's equation.
- Draw a line diagram of the water supply & distribution line of your hydraulic lab and indicate the source of major and minor losses in it.
- Visit the manufacturer's website for hydraulic pumps, collect the catalog, and select a suitable pump for your home application.
- Prepare a demonstration model of the hydroelectric power plant.
- Prepare a demonstration model of the hydraulic devices.
- Observe pressure gauges used by roadside tire workers, blood pressure measurement by doctors and pressure gauges mounted on a turbine test rig and write a report on it.
- Prepare a report on real life applications of hydraulic systems and pneumatic systems at your college.

Text Books & Reference Books:

1. A Textbook of Hydraulics, Fluid Mechanics and Hydraulic Machines, R.S. Khurmi, - Edn.18, S.Chand & Co., New Delhi.
2. A Textbook of Fluid Mechanics and Hydraulic Machines – by R. K Rajput and and S.Chand & Co, New Delhi.
3. Hydraulic Machines, Jagadishlal, , Metropolitan Book Co. Pvt. Ltd., New Delhi.
4. Fluid Mechanics and Hydraulic Machines, R. K. Bansal, Laxmi Publications Pvt., Ltd, New Delhi.

1020234230	FLUID MECHANICS	L	T	P	C
PRACTICUM		2	0	2	3

Web-based/Online Resources:

1. https://nptel.ac.in/courses/112105206
2. https://nptel.ac.in/courses/112104117
3. https://nptel.ac.in/courses/112103249
4. https://www.classcentral.com/course/youtube-fluid-mechanics-concept-derivation-videos-53034
5. https://fmc-nitk.vlabs.ac.in/fluid-machinery/exp/centrifugal-pump/index.html
6. https://me.iitp.ac.in/Virtual-Fluid-Laboratory/
7. https://eerc03-iiith.vlabs.ac.in/List%20of%20experiments.html
8. https://fm-nitk.vlabs.ac.in/List%20of%20experiments.html

Equipment / Facilities required for conducting the Practical Course.

1.	Pressure Measuring Devices	Sufficient quantity.
2.	Bernoulli's theorem experimental set up	1 no.
3.	Venturi Meter or Orificemeter experimental setup	1 no.
4.	Pipe friction factor experimental set up	1 no.
5.	Centrifugal Pump experimental set up (or) Reciprocating Pump experimental set up	1 no.
6.	Hydraulic turbine test rig.	1 no.
	Required instruments and consumables.	

END SEMESTER QUESTION PATTERN - Theory Exam

Duration: 3 Hrs. **Max. Marks: 100**

Note: Answer Ten questions by selecting two questions from each unit. Each question carries 10 marks each.

Instruction to the Question Setters

Four questions will be asked from every unit, students should write any two questions for 10 marks. The question may have two subdivisions only.

1020234320	ADVANCED MANUFACTURING TECHNOLOGY PRACTICAL	L	T	P	C
PRACTICAL		0	0	4	2

Introduction:

They are able to prepare part programs and operate CNC lathe and Milling machines. They are ready to apply the practical knowledge on 3D printing and robotics to real industrial environment

Course Objectives:

- Features and selection of CNC turning and milling machines.
- Practice in part programming and operation of CNC turning machines, subroutine techniques and use of cycles.
- Study the components of the CNC machine and machine settings
- Machining the components by the CNC machines
- Study the working of 3D printing and robotics and its applications

Course Outcomes:

On successful completion of this course, the student will be able to

CO1: Recall the safety procedure to be followed shop floor.

CO2: Produce components on CNC Turning.

CO3: Create components on CNC Milling.

CO4: Develop components using 3D printer.

CO5. Generate robot programming for different applications.

Pre-requisites:

Basic knowledge on working principle CNC machines,3D printing, Robots

Basic working practice of Lathe & Milling machines

1020234320	ADVANCED MANUFACTURING TECHNOLOGY PRACTICAL	L	T	P	C
PRACTICAL		0	0	4	2

CO/PO Mapping

CO / PO	PO1	PO2	PO3	PO4	PO5	PO6	PO7
CO1	2	2		3	1		
CO2	2	2		3	1		
CO3	2	3		3	1		
CO4	2	2		3	1		
CO5	2	2		3	1		

Legend: 3-High Correlation, 2-Medium Correlation, 1-Low Correlation

Instructional Strategy:

- Engage and Motivate: Teachers should actively engage students to boost their learning confidence
- To help students learn and appreciate numerous concepts and principles in each area, teachers should provide examples from daily life, realistic situations, and real-world engineering and technological applications.
- The demonstration can make the subject exciting and foster in the students a scientific mindset. Student activities should be planned on all the topics.
- Throughout the course, a theory-demonstrate-practice-activity strategy may be used to ensure that learning is outcome- and employability-based.
- Simulation and Real-World Practice: Conduct demonstrations and hands-on activities in a simulated environment, transitioning to real-world scenarios when possible

1020234320	ADVANCED MANUFACTURING TECHNOLOGY PRACTICAL	L	T	P	C
PRACTICAL		0	0	4	2

Assessment Methodology:

	Continuous Assessment (40 marks)				End Semester Examination (60 marks)
	CA1	**CA2**	**CA3**	**CA4**	
Mode	Practical Test	Practical Test	Practical Document	Practical Test	Practical Examination
Portion	First Cycle	Second Cycle	All Exercises	All Exercises	All Exercises
Duration	2 Periods	2 Periods	Regularly	3 Hours	3 Hours
Exam Marks	50	50	100	100	100
Converted to	10	10	10	20	60
Marks	10		10	20	60
Tentative Schedule	7th Week	14th Week	15th Week	16th Week	

Note:

- **CA1 and CA2:** All the exercises/experiments as per the portions mentioned above should be completed and kept for the practical test. The students shall be permitted to select any one by lot for the test. The practical test should be conducted as per the scheme of evaluation as below. The marks awarded will be converted to 10 Marks for each assessment test. Best of one will be considered for the internal assessment of 10 Marks.

  Cycle 1 - Exercises 1, 2, 4, 5 and 7.

  Cycle 2 - Exercises 3, 6, 8, 9 and 10.

1020234320	ADVANCED MANUFACTURING TECHNOLOGY PRACTICAL	L	T	P	C
PRACTICAL		0	0	4	2

SCHEME OF EVALUATION

PART	DESCRIPTION	MARKS
A	Aim & Tools required	10
B	Writing CNC Program / Modelling / Editing	20
C	Simulation / Slicing	20
TOTAL		**50**

- **CA 3:** Practical document should be maintained for every exercise immediately after completion of the practice. The same should be evaluated for 10 Marks. The total marks awarded should be converted to 10 Marks for the internal assessment. The practical document should be submitted for the Practical Test and End Semester Examination with a bonafide certificate

  The details of the documents to be prepared as per the instruction below.

  Each exercise should be completed on the day of practice. The same shall be evaluated for 10 marks on the day or next day of practice before commencement of the next exercise.

  This documentation can be carried out in a separate notebook or a printed manual or a file with documents. The part program and sketch should be written by the student manually.

  The detailed date of the practices and its evaluations should be maintained in the course logbook. The log book and the practical documents should be submitted for the verification by the Flying Squad and DOTE Official.

- **CA 4:** All the exercises should be completed and kept for the practical test. The students shall be permitted to select any one by lot for the test. The practical test should be conducted as per the scheme of evaluation as below. The marks awarded should be converted to 20 Marks for the internal assessment.

1020234320	ADVANCED MANUFACTURING TECHNOLOGY PRACTICAL	L	T	P	C
PRACTICAL		0	0	4	2

SCHEME OF EVALUATION

Part	Description	Marks
A	Aim & Tools required	10
B	Writing CNC Program / Modelling	20
C	Simulation / Slicing	20
D	Editing in the machine or simulator / Interfacing	30
E	Finish / Output	10
F	Viva Voce	10
	TOTAL MARKS	**100**

Syllabus Contents

Introduction	
Study of CNC lathe, milling. - Study of international standard codes:G-Codes and M-Codes. - Format – Dimensioning methods. - Program writing –Turning simulator – Milling simulator, IS practice – commands menus. - Editing the program in the CNC machines. - Set the machine and execute the program in the CNC machines Introduction - 3D printing - modelling software- slicing software -parameters like layer thickness- orientation and infill on build time Robotics - introduction - types - configurations - joints - degrees of freedom - industrial applications - robot analyzer software - features.	10

1020234320	ADVANCED MANUFACTURING TECHNOLOGY PRACTICAL	L	T	P	C
PRACTICAL		0	0	4	2

Practical Exercises 40

CNC Turning Machine Material: M.S / Aluminium / Acrylic fibre / Plastic

1. . Using Linear and Circular interpolation - Create a part program and produce component in the Machine

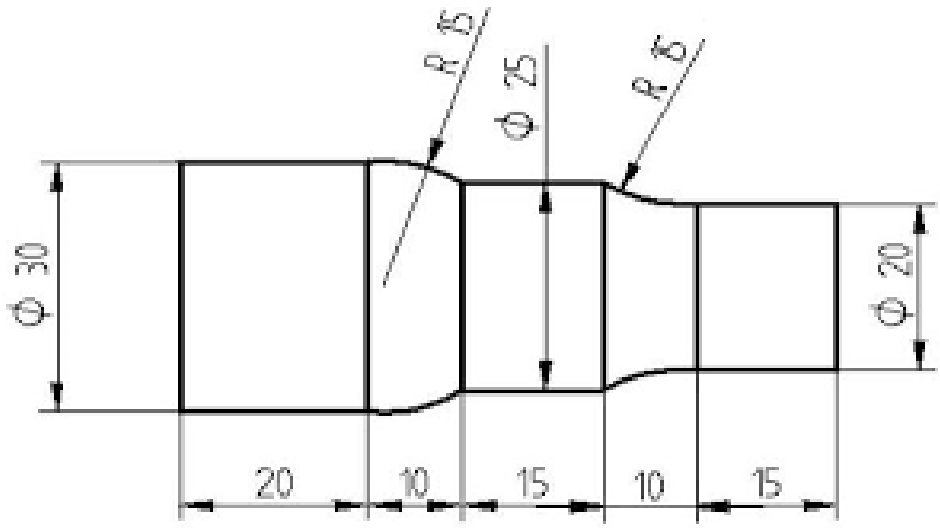

2. Using Stock removal cycle – Create a part program for multiple turning operations and produce component in the Machine.

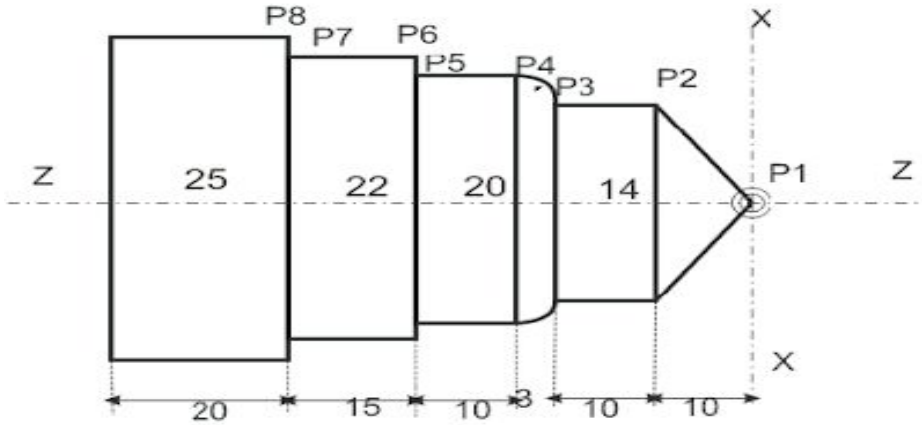

3. Using canned cycle - Create part program for thread cutting,grooving and produce component.

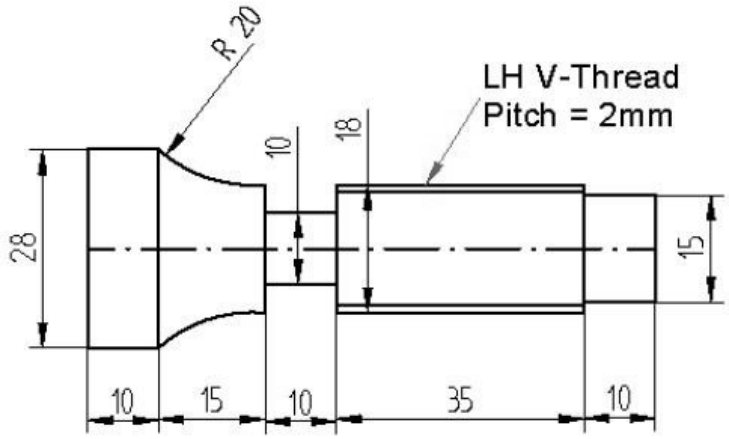

CNC Milling Machine Material: M.S / Aluminum / acrylic fibre / plastic

4. Using Linear interpolation and Circular interpolation – Create a part program for grooving and produce component in the Machine.

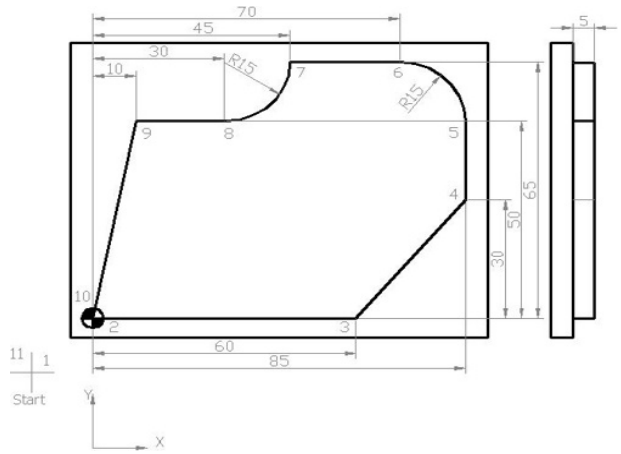

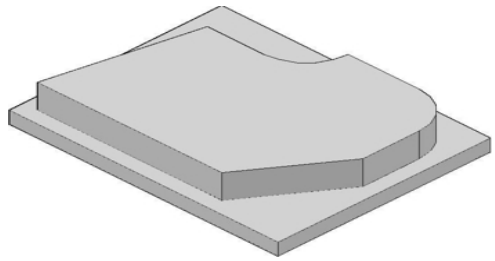

5. Using canned cycle - Create a part program for drilling produce component in the Machine

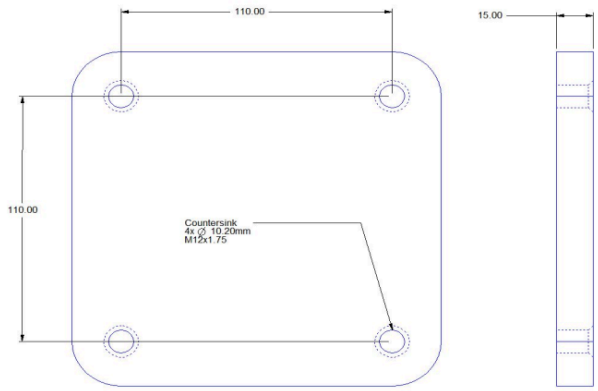

6. Using subprogram - Create a part program and produce the component in the Machine.

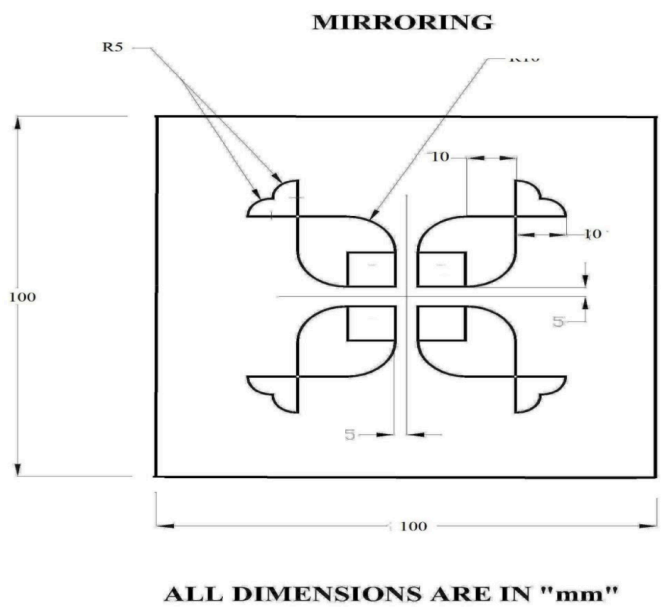

7. Model the given engineering component and prepare the .stl file to print using a 3D printer or simulator. - Geneva Wheel

1020234320	ADVANCED MANUFACTURING TECHNOLOGY PRACTICAL	L	T	P	C
PRACTICAL		0	0	4	2

8. Model the given engineering component and prepare the .stl file to print using a 3D printer or simulator. - C Clamp with V Block. 9. Position and record the point to point motion of the robot arm or in a simulator. (5 Positions) 10. Position and record the continuous motion of the robot arm or in a simulator. (The profile should have Straight line, Circular and inclined line)	
Test and Revision	10
Total	60

Suggested List of Students Activity:

1. Study and practice the CNC programming for various component machining
2. FIeld visit near by industries based on CNC machines and make report
3. Visit to any three 3D printing industries and make report
4. Study the robot configuration and learn about different application of robot
5. Prepare a presentation about recent applications of 3D printing and robots.

Text and Reference Books:

1. P. Radhakrishnan, S. Subramanyam, CAD/CAM/CIM,2 nd edition, New Age International, 2008.
2. Mikell P. Groover, Mitchell Weiss, Roger N Nagel, Industrial robotics technology, programming, and applications, 2nd edition, McGraw hill Education pvt. ltd.,2012.
3. V. K. Jain, Advanced Machining Processes, 1 st edition , Allied Publications,2010.

Web-based/Online Resources:

- https://archive.nptel.ac.in/courses/112/107/112107078/
- http://www.roboanalyzer.com/
- https://archive.nptel.ac.in/courses/112/104/112104265/

1020234320	ADVANCED MANUFACTURING TECHNOLOGY PRACTICAL	L	T	P	C
PRACTICAL		0	0	4	2

Equipment / Facilities required conducting the Practical Course.

1. Personal computer - 30 Nos.
2. CNC Simulation software - Sufficient to the strength
3. CNC Lathe –1 No.
4. CNC Mill –1 No.
5. Laser / Inkjet Printer – 1 No.
6. 3D printer - 1 No or Modelling and slicing software - as per the requirement .
7. Robotic arm - 1 No. or Robotic simulation software - as per the requirement.
8. Consumables - Sufficient quantity

END SEMESTER EXAMINATION – Practical Exam

Note:

- All the exercises should be completed. All the exercise should be given for examinations, students can select any one exercise by lot ot the question paper supplied by the DOTE shall be used.
- Practical documents should be prepared, the same should be submitted for the End Semester Examinations along with the bonafide certificate.

DETAILED ALLOCATION OF MARKS.

Part	Description	Marks
A	Aim & Tools required	10
B	Writing CNC Program / Modelling	20
C	Simulation / Slicing	20
D	Editing in the machine or simulator / Interfacing	30
E	Finish / Output	10
F	Viva Voce	10
	TOTAL MARKS	**100**

1020234440	SENSORS AND ACTUATORS	L	T	P	C
PRACTICUM		1	0	4	3

Introduction:

Sensors are needed to measure (sense) unknown signals and parameters of an engineering system and its environment. Essentially, sensors are needed to monitor and learn about the system. Sensor is a device that when exposed to a physical phenomenon (temperature, displacement, force, etc.) produces a proportional output signal (electrical, mechanical, magnetic, etc.). Actuators are needed to drive a plant. A diploma holder when employed in automated industrial process controls will be required to know the basics of Sensors and Actuators.

Course Objectives:

The objective of this course is to enable the student to

- Explain the types and working of various types of sensors.
- Practice with temperature sensor, proximity sensor, LVDT and Light Sensors.
- Describe the functions of Linear and Rotary Electrical actuators.
- Describe the functions of Electrical, Pneumatic and Hydraulic actuators.
- Practice with interfacing of Arduino compatible sensors and actuator with Arduino.

Course Outcomes:

On successful completion of this course, the student will be able to

CO1: Describe the working of Resistive, Inductive, Temperature and Light Sensors.

CO2: Interface and observe the behaviour of Proximity sensors with relay and buzzer.

CO3: Construct the circuit and observe the behaviour of the solid state electronic actuator.

CO4: Describe the working of Electrical, Pneumatic and Hydraulic actuators.

CO5: Demonstrate the applications of Arduino compatible sensors and actuators.

Pre-requisites:

Applied Physics, Basic Electrical and Mechanical Engineering.

1020234440	SENSORS AND ACTUATORS	L	T	P	C
PRACTICUM		1	0	4	3

CO/PO Mapping

CO / PO	PO1	PO2	PO3	PO4	PO5	PO6	PO7
CO1	3	1	2	2			
CO2	3	1	2	2			
CO3	3	1	2	2			
CO4	3	1	2	2			
CO5	3	1	2	2			

Legend: 3-High Correlation, 2-Medium Correlation, 1-Low Correlation

Instructional Strategy:

- It is advised that teachers take steps to pique pupils' attention and boost their curiosity to learn.
- Implement task-based learning activities where students work on specific tasks or projects.
- Incorporate technology tools and resources, such as online platforms, interactive multimedia, and virtual communication tools, to enhance engagement and provide additional practice opportunities.
- Incorporate formative and summative assessments to gauge student progress and provide targeted feedback.
- Throughout the course, a theory-demonstrate-practice-activity strategy may be used to ensure that learning is outcome and employability based.
- All demonstrations/Hand-on practices may be followed in the real environment as far as possible.

1020234440	SENSORS AND ACTUATORS	L	T	P	C
PRACTICUM		1	0	4	3

Assessment Methodology:

	Continuous Assessment (40 marks)				End Semester Examination (60 marks)
	CA1	**CA2**	**CA3**	**CA4**	
Mode	Practical Test	Practical Test	Written Test Theory	Practical Test	Practical Examination
Portion	Cycle I Experiments	Cycle II Experiments	All Units	All Experiments	All Experiments
Duration	2 Periods	2 Periods	3 Hours	3 Hours	3 hours
Exam Marks	60	60	100	100	100
Converted to Marks	10	10	15	15	60
Marks	10		15	15	60
Tentative Schedule	7th Week	14th Week	15th Week	16th Week	

Note:

- **CA1 and CA2:** All the exercises/experiments should be completed as per the portions above and kept for the practical test. The students shall be permitted to select any one by lot for the test. The practical test should be conducted as per the scheme of evaluation as below. The marks awarded shall be converted to 10 Marks for each assessment test. Best of one will be considered for the internal assessment of 10 Marks.

  Practical documents should be maintained for every experiment immediately after completion of the practice. The practical document should be submitted for the practical test. The same should be evaluated for 10 Marks for each exercise/experiment. The total marks awarded should be converted to 10 Marks for the practical test as per the scheme of evaluation as below.

1020234440	SENSORS AND ACTUATORS	L	T	P	C
PRACTICUM		1	0	4	3

The details of the documents to be prepared as per the instruction below.

Each experiment should be completed on the day of practice. The same shall be evaluated for 10 marks on the day or next day of practice before commencement of the next experiment.

This documentation can be carried out in a separate notebook or a printed manual or a file with documents. The student should draw the Circuit Diagram and take readings, do calculations and prepare the Graph/Result manually in the documents.

The detailed date of the practices and its evaluations should be maintained in the course logbook. The log book and the practical documents should be submitted for the verification by the Flying Squad and DOTE Official.

SCHEME OF EVALUATION

PART	DESCRIPTION	MARKS
A	Aim & Apparatus Required	5
B	Circuit Diagram	20
C	Connections and Execution	25
TOTAL		50
D	Practical Documents (As per the portions)	10
Total Marks		60

Cycle I: 1, 2, 3, 4 and 5.

Cycle II: 6, 7, 8, 9 and 10.

- **CA 3:** Written Test for complete theory portions should be conducted for 100 Marks as per the question pattern below. The marks scored will be converted to 15 Marks for internal assessment.

1020234440	SENSORS AND ACTUATORS	L	T	P	C
PRACTICUM		1	0	4	3

Question pattern – Written Test Theory

Description		Marks	
Part – A	30 MCQ Questions.	30 X 1 Mark	30 Marks
Part – B	7 Questions to be answered out of 10 Questions.	7 X 10 Marks	70 Marks
TOTAL			100 Marks

- **CA 4:** All the exercises/experiments should be completed and kept for the practical test. The students shall be permitted to select any one by lot for the test. The practical test should be conducted as per the scheme of evaluation below. After completion of all the exercises the practical test should be conducted as per End Semester Examination question pattern scheme of evaluation. The marks awarded should be converted to 15 Marks for the internal assessment.

SCHEME OF EVALUATION

Model Practical Examination and End Semester Examination - Practical Exam

PART	DESCRIPTION	MARKS
A	Aim & Apparatus Required	5
B	Circuit Diagram	20
C	Connections and Execution	25
D	Output / Result	10
E	Written Test (Theory Portions)	30
F	Viva Voce	10
	TOTAL	100

Note: For the written test 30 MCQ shall be asked from the theory portions.

1020234440	SENSORS AND ACTUATORS	L	T	P	C
PRACTICUM		1	0	4	3

Syllabus Contents

Theory Portion	
UNIT I: SENSORS	**Period**
Resistance, Inductance and Capacitive Sensors: Definition – Classification of Sensors/Transducers - Elements of measurement system – Primary Sensing Elements (Bellows, Bourdon Tube) - Potentiometer - Linear potentiometer – Rotary potentiometer - Load Cell – Strain Gauge Load Cell - Linear Variable Differential Transformer (LVDT) – Rotary - Variable Differential Transformer (RVDT) – DC Tachogenerator – AC Tachogenerator - Principles of Capacitive Sensors – Hall effect sensor. Temperature Sensors: Thermocouple – Resistance Temperature Detector –Thermistor - Infrared (IR) thermometer. Proximity Sensors: Inductive Proximity Sensor – Capacitive Proximity Sensor - Photoelectric Proximity Sensor - Ultrasonic Proximity Sensor - Basic Reed Switch. Light Sensor: Photodiode – Phototransistor – Photoconductive Cell - Photovoltaic Cells - Bar Code Reader - Shaft Encoders - Encoder Types (Incremental Encoder, Absolute Encoder) - Optical Shaft Encoder - Photoelectric Tachometer. Arduino Compatible Sensor : Voltage Sensor – Current Sensor – LM35 Sensor - Ultrasonic Sensor - Force Sensor – Moisture Sensor – Gas Sensor.	**8**

Practical Exercises:

Ex.No	**Name of the Experiment**	**Period**
1.	TEMPERATURE MEASUREMENT <u>Activities to Perform:</u> i) Construct a circuit to measure Temperature of Liquid using Thermistor or Thermocouple or RTD. ii) Also find the graphical relationship between input and output.	**4**

2.	BEHAVIOUR OF PROXIMITY SENSORS Activities to Perform: i) Observe the behaviour of Inductive proximity sensor and Capacitive Proximity sensor for different material samples. ii) Interface relay and buzzer with sensors to test the output.	**4**
3.	LVDT Activities to Perform: i) Construct a circuit for Measurement of Linear Displacement using LVDT. ii) Find the graphical relationship between input and output.	**4**
4.	PERFORMANCE OF LIGHT SENSOR Activities to Perform: i) Construct a circuit to obtain the VI characteristics and Response Characteristics of Photoconductive Cell (LDR). ii) Construct a circuit to measure the speed of the motor using Optical Sensor.	**4**
5.	PERFORMANCE OF ULTRASONIC AND MOISTURE SENSORS Activities to Perform: i) Interface Ultrasonic sensor with Arduino and measure the distance of the object. ii) Interface Moisture sensor with Arduino and measure the moisture content in the soil.	**4**

1020234440	SENSORS AND ACTUATORS	L	T	P	C
PRACTICUM		1	0	4	3

UNIT II: ACTUATORS	
Electrical Actuators: General aspects - Switching Devices – Mechanical Switches (Push button – SPST –SPDT – Limit Switch – Solenoid – Relays) – Solid State switches (Diode, Transistor and Thyristor) – DC Motors – AC Motors – Stepper Motors – Servo Motors. Pneumatic Actuators: Introduction – Components of a Pneumatic Systems –Linear actuators – Construction and working of Single acting and Double acting cylinders - Rotary Actuators – Air Motors – Types of Air Motors - Piston type Motor, Vane Motor, Turbine Motor - Applications of Air Motors. Hydraulic Actuators: Hydraulic Power Supply - Components of Hydraulic system - Linear actuators - Construction and working of Single acting and Double acting cylinders – Applications of Hydraulic Cylinders - Some example mechanism driven by an Hydraulic cylinders - Rotary Actuators – Hydraulic Motors – Advantages and Applications of Hydraulic Motors.	**7**

Practical Exercises:

Ex.No	**Name of the Experiment**	**Period**
6.	OBSERVE THE BEHAVIOUR OF TRANSISTOR AS A SWITCH <u>Activities to Perform:</u> i) Construct a circuit to get ON/OFF control on DC Motor using Push Button, SPST, SPDT and Limit Switch. ii) Construct a circuit to get ON/OFF control on DC Motor using Transistor and Relay.	**4**
7.	FORWARD AND REVERSE CONTROL OF AC MOTOR <u>Activities to Perform:</u> i) Connect Forward Reverse Control switch to change the direction of rotation of three phase induction motor. ii) Demonstrate the Forward and Reverse operation of Motor.	**4**

	iii) Measure the No-Load current in each phase using Tongue tester (Clamp Meter).	
8.	PNEUMATIC CIRCUIT FOR DOUBLE ACTING CYLINDER Activities to Perform: i) Construct a Pneumatic Circuit to control double acting pneumatic cylinder using 5/2 Solenoid Valve. ii) Discuss the behaviour of cylinder as linear actuator.	**4**
9.	OBSERVE THE BEHAVIOUR OF HYDRAULIC MOTOR Activities to Perform: i) Construct a Hydraulic Circuit to control Hydraulic Motor. ii) Observe the behaviour of Hydraulic Motor.	**4**
10.	SERVO MOTOR CONTROL WITH AN ARDUINO Activities to Perform: i) Construct an Arduino based circuit to sweeps the shaft of servo motor back and forth across 180 degree. ii) Interface potentiometer with Arduino and based on its position get the control of servo motor shaft.	**4**
	Revision + Test + Practice	**20**
	Total	**75**

Suggested List of Students Activity:

1. Activity 1 : Each student writes and submits the assignment on the topic Basics of Electricity, Ohm's Law and Electromagnetism.
2. Activity 2 : Four students can be grouped as a batch and practice an additional experiment to interface any one of the Arduino compatible sensors (LM35 Temperature sensor, Force Sensor, Gas Sensor, Voltage Sensor, Humidity Sensor, Rain Sensor, Acceleration sensor, magnetic sensor, Infrared sensor etc.,) with Arduino and observe the behaviour of sensors.

1020234440	SENSORS AND ACTUATORS	L	T	P	C
PRACTICUM		1	0	4	3

Text book for Reference:

1. D. Patranabis, Sensors and Transducers, Multicolour Edition, Second Edition, PHI Learning Private Limited., 2013.
2. Er. R.K. Rajput, A Textbook of Mechatronics, Fourth Edition, S. Chand & Co., 2016.
3. Jacob Fraden, Handbook of Modern Sensors: Physics, Designs and Application, Fourth edition, Springer, 2010.
4. Massood Tabib and Azar, Microactuators Electrical, Magnetic, thermal, optical, mechanical, chemical and smart structures, First edition, Kluwer academic publishers, Springer, 1997.

Web-based/Online Resources:

- https://archive.nptel.ac.in/courses/108/108/108108147/
- https://www.youtube.com/watch?v=H9OEAn3Uc2w
- https://www.youtube.com/watch?v=Ab9U7NQB1kA

1020234440	SENSORS AND ACTUATORS	L	T	P	C
PRACTICUM		1	0	4	3

Equipment / Facilities required to conduct the Practical Course.

S.No	Name of the Equipment's	Quantity Required
1.	Temperature Measurement using Thermocouple / Thermistor / RTD Kit	1 No
2.	Inductive and Capacitive Proximity Sensors, Relay, Buzzer, Suitable Power Supply Unit	Each 1 No
3.	LVDT Trainer Kit	1 No
4.	LDR, MC Ammeter and Voltmeter, 0-30V DC Power Supply Unit, DC Motor with Optical Sensor set up	Each 1 No
5.	Arduino Shield, Arduino compatible Ultrasonic Sensor and Moisture sensor	Each 1 No
6.	Push Button, SPST, SPDT, Limit Switch, Low Voltage DC Motor, Transistor and Relay	Each 1 No
7.	3 Phase Induction Motor, Forward Reverse Control switch and Clamp Meter	Each 1 No
8.	Double acting Pneumatic cylinder, Directional Control Valve, Compressor	Each 1 No
9.	Hydraulic Motor, Control Valve, Hydraulic Power Bank	Each 1 No
10.	Arduino shield, Arduino compatible Servo Motor and Potentiometer	Each 1 No
11.	Other Consumables	As Required

1020234440	SENSORS AND ACTUATORS	L	T	P	C
PRACTICUM		1	0	4	3

END SEMESTER EXAMINATIONS – PRACTICAL EXAM

Note:

All the exercises should be completed before the Board Practical Examinations. End Semester Practical examination should be conducted for all the exercises / experiments for 100 Marks. Students will be permitted to select any one exercise by lot or question paper supplied by the DOTE Exam section shall be used. The record of work done by the student should be submitted with a Bonafide Certificate.

SCHEME OF EVALUATION

PART	DESCRIPTION	MARKS
A	Aim & Apparatus Required	5
B	Circuit Diagram	20
C	Connections / Execution	25
D	Output / Result	10
E	Written Test	30
F	Viva Voce	10
	TOTAL	100

Note: For the written test 30 MCQ shall be asked from the theory portions.

1020234540	HEAT POWER ENGINEERING	L	T	P	C
PRACTICUM		1	0	4	3

Introduction

The purpose of heat power engineering is to give conceptual and principles involving thermal science, especially focusing on Internal combustion engine, Refrigerator, and compressors. Through experiments and simulations conducted in the lab, students can validate theoretical concepts, optimize system performance, testing of various oil properties for using as a fuel and lubricant in thermal systems and develop innovative solutions for real-world applications. This practical knowledge enhances their problem-solving skills and prepares them for the challenges they will face in their careers.

Course Objectives

The objective of this course is to enable the student,

1. To understand the fundamental concepts involved in thermal systems.
2. To analyse the various performance parameters of internal combustion (IC) engines.
3. To analyse the performance of refrigeration cycle/ components.
4. To analyse the performance of the compressor and its volumetric efficiency.
5. To study the properties, complete combustion of fuels and its products.

Course Outcomes

On successful completion of this course, the student will be able to

CO1: Interpret the performance indicators of air standard cycles.

CO2: Analyse the performance characteristics of IC engines for various fuels

CO3: Categorise the principles of refrigeration and air conditioning with applications

CO4: Categorise the principles of air compressor applications

CO5: Evaluate the combustion products of fuels by using the exhaust gas analyzer.

Pre-requisites

Basic knowledge of Science, Maths

1020234540	HEAT POWER ENGINEERING	L	T	P	C
PRACTICUM		1	0	4	3

CO/PO Mapping

CO / PO	PO1	PO2	PO3	PO4	PO5	PO6	PO7
CO1	3	2	1	2			
CO2	3	2	1	2			
CO3	3	2	1	2			
CO4	3	2	1	2			
CO5	3	2	1	2			

Legend: 3-High Correlation, 2-Medium Correlation, 1-Low Correlation

Instructional Strategy:

- It's recommended that teachers take action to grab students' interest and increase their confidence in their ability to learn.
- Teachers should use examples from everyday life, realistic scenarios, and real-world engineering and technological applications to help students understand and appreciate the many concepts and principles in each subject.
- The demonstration might spark interest in the subject and encourage a scientific perspective. Every topic should have planned student activities.
- To make sure that learning is outcome-and employability - based, a theory - demonstrate - practice - activity approach may be used throughout the course.

1020234540	HEAT POWER ENGINEERING	L	T	P	C
PRACTICUM		1	0	4	3

Assessment Methodology:

	Continuous Assessment (40 marks)				End Semester Examination (60 marks)
	CA1	**CA2**	**CA3**	**CA4**	
Mode	Practical Test	Practical Test	Written Test Theory	Practical Test	Practical Examination
Portion	Cycle I Exercises	Cycle II Exercises	All Units	All Exercises	All Exercises
Duration	2 Periods	2 Periods	3 Hours	3 Hours	3 hours
Exam Marks	60	60	100	100	100
Converted to Marks	10	10	15	15	60
Marks	10		15	15	60
Tentative Schedule	7th Week	14th Week	15th Week	16th Week	

Note:

- **CA1 and CA2:** All the exercises/experiments should be completed as per the portions above and kept for the practical test. The students shall be permitted to select any one by lot for the test. The practical test should be conducted as per the scheme of evaluation as below. The marks awarded shall be converted to 10 Marks for each assessment test. Best of one will be considered for the internal assessment of 10 Marks.

  Practical documents should be maintained for every exercise / experiment immediately after completion of the practice. The practical document should be submitted for the practical test. The same should be evaluated for 10 Marks for each exercise/experiment. The total marks awarded should be converted to 10 Marks for the practical test as per the scheme of evaluation as below.

1020234540	HEAT POWER ENGINEERING	L	T	P	C
PRACTICUM		1	0	4	3

The details of the documents to be prepared as per the instruction below.

Each experiment should be completed on the day of practice. The same shall be evaluated for 10 marks on the day or next day of practice before commencement of the next exercise.

This documentation can be carried out in a separate notebook or a printed manual or a file with documents. The observations, readings, calculations and sketches should be written by the student manually.

The detailed date of the practices and its evaluations should be maintained in the course logbook. The log book and the practical documents should be submitted for the verification by the Flying Squad and DOTE Official.

SCHEME OF EVALUATION

PART	DESCRIPTION	MARKS
A	Aim and procedure	10
B	Tabular Column / Formulae	10
C	Observation / Calculation / Diagram	30
TOTAL		50
D	Practical Documents (As per the portions)	10
		60

Cycle 1: Exercise 1, 2, 3, 4 and 5.

Cycle 2: Exercise 6, 7, 8, 9 and 10.

- **CA 3:** Written Test for complete theory portions should be conducted for 100 Marks as per the question pattern below. The marks scored will be converted to 15 Marks for internal assessment.

1020234540	HEAT POWER ENGINEERING	L	T	P	C
PRACTICUM		1	0	4	3

Question pattern – Written Test Theory

Description		Marks	
Part – A	30 MCQ from the complete theory portions.	30 X 1 Mark	30 Marks
Part – B	Seven Questions to be answered out of 10 Questions.	7 X 10 Marks	70 Marks
TOTAL			100 Marks

- **CA 4:** All the exercises/experiments should be completed and kept for the practical test. The students shall be permitted to select any one by lot for the test. The practical test should be conducted as per the scheme of evaluation below. After completion of all the exercises the practical test should be conducted as per End Semester Examination question pattern scheme of evaluation. The marks awarded should be converted to 15 Marks for the internal assessment.

SCHEME OF EVALUATION

Model Practical Examination and End Semester Examination - Practical Exam

PART	DESCRIPTION	MARKS
A	Aim and procedure	10
B	Tabular Column / Formulae	10
C	Observation / Calculation / Diagram	30
D	Result / Graph	10
E	Written Test (Theory Portions)	30
F	Viva Voce	10
	TOTAL	100

Note: For the written test 30 MCQ shall be asked from the theory portions.

1020234540	HEAT POWER ENGINEERING	L	T	P	C
PRACTICUM		1	0	4	3

Syllabus contents

THEORY		
Unit I	**AIR CYCLES AND IC ENGINES**	
Basic concept of thermodynamics, definition and units of pressure, temperature, volume, density, specific heat, energy, work, force, power, heat, enthalpy, and entropy. Laws of perfect gases and its Equation. Thermodynamic processes such as constant volume, constant pressure, constant temperature, adiabatic, polytropic. (simple problems) Air cycles - air standard efficiency - reversible and irreversible processes - Carnot cycle - Otto cycle - Diesel cycle. Illustration of above cycles on pressure, volume, temperature, and entropy scale- working and calculation of efficiency. (simple problems) Internal combustion engines – classification - comparison of four stroke and two stroke engines. Testing of IC engines– indicated power – brake power – friction power – efficiencies of I.C. engines – indicated thermal, brake thermal, mechanical, and relative efficiencies – Specific fuel consumption.		9
Practical Exercises:		
Ex.No	**Name of the Experiment**	**Period**
1	Determine the flash and fire point of the lubricating oil by using Open cup apparatus and Closed cup apparatus and compare the value for the given sample.	5
2	Draw the valve timing diagram of single cylinder four stroke petrol engines.	5
3	Draw the valve timing diagram of single cylinder four stroke diesel engines.	5
4	Draw the port timing diagram of a single cylinder two stroke Petrol Engine.	5

5	Load test (Performance test) on Four Stroke Diesel Engine or Four Stroke Petrol Engine.	5
6	Morse test on multi-cylinder petrol engine.	5
7	Heat balance test on Four Stroke Diesel or Petrol Engine.	5
Unit II	**AIR COMPRESSOR , REFRIGERATION AND FUELS**	
Air Compressor and its functions, Single stage & Multi stage reciprocating air compressor - Refrigeration: Introduction to refrigeration, refrigerant, refrigeration effects. COP, TON of refrigeration. Vapor compression refrigeration (VCR) system. Classifications of fuels– requirements of a good fuel – stoichiometric air required for complete combustion of fuels –products of combustion – analysis of exhaust gases - calorific value of fuels – higher and lower calorific values.		6
Practical Exercises:		
Ex.No	**Name of the Experiment**	**Period**
8	Volumetric efficiency of Air Compressor.	5
9	Determination of COP of Refrigeration System.	5
10	Find the Percentage of CO, CO_2, O_2, and amount of HC, NOx using Exhaust gas analyser.	5
	Test + Revision	10
	TOTAL HOURS	75

List of Students Activity to be performed:

- Dismantling and assembling a reciprocating and rotary compressor .
- Study the types of Refrigerants and their properties.
- Study the working principle of two stroke and four stroke engines.
- Study the Valve Timing / Port Timing of multi cylinder engine.

1020234540	HEAT POWER ENGINEERING	L	T	P	C
PRACTICUM		1	0	4	3

Textbook for reference

1. R. K. Rajput, Thermal Engineering, 11th Edition, Laxmi publications Pvt Ltd , New Delhi, 2020.
2. R.S. Khurmi, J. K. Gupta, A Textbook of Thermal Engineering, S. Chand Publishing, 2019.
3. R. K. Rajput , A Text Book of Automobile Engineering, Laxmi publications Pvt Ltd, New Delhi, 2012.
4. P. K. Nag, Basic And Applied Thermodynamics 2/E, McGraw-Hill Education (India) Pvt Limited, 2010.

Website links for reference

- NPTEL (Website): https://archive.nptel.ac.in/courses/112/103/112103316/
- NPTEL (Website): https://archive.nptel.ac.in/courses/112/103/112103262/

1020234540	HEAT POWER ENGINEERING	L	T	P	C
PRACTICUM		1	0	4	3

List of Equipments

S.No.	Name of Equipments	Quantity
1.	Open cup apparatus	1 No.
2.	Closed cup apparatus	1 No.
3.	Four stroke petrol engine cut section model for valve timing diagram.	1 No.
4.	Four stroke diesel engine cut section model for valve timing diagram.	1 No.
5.	Two stroke petrol cut section model for port timing diagram.	1 No.
6.	Four Stroke Petrol Engine or Diesel Engine Test rig.	1 No.
7.	Multi- Cylinder Petrol or Diesel Engine Test rig.	1 No.
8.	Air Compressor Test rig.	1 No.
9.	Refrigeration Test rig.	1 No.
10.	Exhaust Gas Analyzer.	1 No.
11.	Reciprocating and Rotary Air compressor for dismantling and assembling	1 No.

1020234540	HEAT POWER ENGINEERING	L	T	P	C
PRACTICUM		1	0	4	3

END SEMESTER EXAMINATION – PRACTICAL EXAM

Note: All the exercises should be given in the question paper and students are allowed to select by a lot or the question paper allotted from the DOTE shall be used.

Practical document should be submitted for the examination with a bonafide certificate.

SCHEME OF EVALUATION

PART	DESCRIPTION	MARKS
A	Aim and procedure	10
B	Tabular Column / Formulae	10
C	Observation / Calculation / Diagram	30
D	Result / Graph	10
E	Written Test (Theory Portions)	30
F	Viva Voce	10
	TOTAL	100

Note: For the written test 30 MCQ shall be asked from the theory portions.

1020234640	METROLOGY AND MEASUREMENTS	L	T	P	C
PRACTICUM		1	0	4	3

Introduction

The progress in metrology and measurements is highly necessary and has led to improvements in product quality, enhanced scientific research capabilities, and increased efficiency in diverse industries including manufacturing, automobile, aerospace, and quality control. It encompasses various disciplines and techniques used to ensure the accuracy, precision, and reliability of measurements. Therefore, the study of metrology and measurements is essential for maintaining uniformity and excellence across various fields, including manufacturing and scientific research.

Course Objectives

The objective of this course is to prepare the student,

- To impart knowledge about different measuring instruments.
- To provide fundamental principles of metrology and understand the significance of accurate measurements.
- To acquire knowledge regarding the measurement of linear and angular dimensions of components and assemblies.
- To impart knowledge on advanced measurement techniques for quality control in manufacturing industries

Course Outcomes

On successful completion of this course, the student will be able to,

CO1: Classify the measuring instruments based on their applications.

CO2: Select appropriate instrument for linear dimensions

CO3: Select appropriate instrument for angular dimensions

CO4: Explain various instruments used in measuring screw threads and gears

CO5: Discuss about the applications of CMM and LASER technology in metrology

Pre-requisites

Knowledge of basic measuring instruments.

1020234640	METROLOGY AND MEASUREMENTS	L	T	P	C
PRACTICUM		1	0	4	3

CO/PO Mapping

CO / PO	PO1	PO2	PO3	PO4	PO5	PO6	PO7
CO1	2			2			
CO2	2			2			
CO3	2			2			
CO4	2			2			
CO5	2			2			

Legend: 3-High Correlation, 2-Medium Correlation, 1-Low Correlation

Instructional Strategy

- It is advised that teachers take steps to pique pupils' attention and boost their curiosity to learn.
- Implement task-based learning activities where students work on specific tasks or projects.
- Incorporate technology tools and resources, such as online platforms, interactive multimedia, and virtual communication tools, to enhance engagement and provide additional practice opportunities.
- Incorporate formative and summative assessments to gauge student progress and provide targeted feedback.
- Throughout the course, a theory-demonstrate-practice-activity strategy may be used to ensure that learning is outcome and employability based.
- All demonstrations/Hand-on practices may be followed in the real environment as far as possible.

1020234640	METROLOGY AND MEASUREMENTS	L	T	P	C
PRACTICUM		1	0	4	3

Assessment Methodology:

	Continuous Assessment (40 marks)				End Semester Examination (60 marks)
	CA1	**CA2**	**CA3**	**CA4**	
Mode	Practical Test	Practical Test	Written Test Theory	Practical Test	Practical Examination
Portion	Cycle I Exercises	Cycle II Exercises	All Units	All Exercises	All Exercises
Duration	2 Periods	2 Periods	3 Hours	3 Hours	3 hours
Exam Marks	60	60	100	100	100
Converted to Marks	10	10	15	15	60
Marks	10		15	15	60
Tentative Schedule	7th Week	14th Week	15th Week	16th Week	

Note:

- **CA1 and CA2:** All the exercises/experiments should be completed as per the portions above and kept for the practical test. The students shall be permitted to select any one by lot for the test. The practical test should be conducted as per the scheme of evaluation as below. The marks awarded shall be converted to 10 Marks for each assessment test. Best of one will be considered for the internal assessment of 10 Marks.

  Practical documents should be maintained for every exercise / experiment immediately after completion of the practice. The practical document should be submitted for the practical test. The same should be evaluated for 10 Marks for each exercise/experiment. The total marks awarded should be converted to 10 Marks for the practical test as per the scheme of evaluation as below.

1020234640	METROLOGY AND MEASUREMENTS	L	T	P	C
PRACTICUM		1	0	4	3

The details of the documents to be prepared as per the instruction below.

Each exercise should be completed on the day of practice. The same shall be evaluated for 10 marks on the day or next day of practice before commencement of the next exercise.

This documentation can be carried out in a separate notebook or a printed manual or a file with documents. The observations, readings, calculations and sketches should be written by the student manually in the document.

The detailed date of the practices and its evaluations should be maintained in the course logbook. The log book and the practical documents should be submitted for the verification by the Flying Squad and DOTE Official.

SCHEME OF EVALUATION

PART	DESCRIPTION	MARKS
A	Procedure / Preparation	10
B	Observation / Dimensions	20
C	Accuracy	20
TOTAL		50
D	Practical Documents (As per the portions)	10
		60

Cycle - I Exercise 1, 2, 3, 4, 5 and 6.

Cycle - II Exercise 7, 8, 9 and 10.

- **CA 3:** Written Test for complete theory portions should be conducted for 100 Marks as per the question pattern below. The marks scored will be converted to 15 Marks for internal assessment.

1020234640	METROLOGY AND MEASUREMENTS	L	T	P	C
PRACTICUM		1	0	4	3

Question pattern – Written Test Theory

Description		Marks	
Part – A	30 MCQ from the complete theory portions.	30 X 1 Mark	30 Marks
Part – B	Seven Questions to be answered out of 10 Questions.	7 X 10 Marks	70 Marks
TOTAL			100 Marks

- **CA 4:** All the exercises/experiments should be completed and kept for the practical test. The students shall be permitted to select any one by lot for the test. The practical test should be conducted as per the scheme of evaluation below. After completion of all the exercises the practical test should be conducted as per End Semester Examination question pattern scheme of evaluation. The marks awarded should be converted to 15 Marks for the internal assessment.

SCHEME OF EVALUATION

PART	DESCRIPTION	MARKS
A	Procedure / Preparation	10
B	Observation / Dimensions	20
C	Accuracy	20
D	Result	10
E	Viva voce	10
F	Written test	30
		100

Note: For the written test 30 MCQ shall be asked from the theory portions.

1020234640	METROLOGY AND MEASUREMENTS	L	T	P	C
PRACTICUM		1	0	4	3

Syllabus contents

THEORY	
UNIT I: LINEAR MEASUREMENTS AND COMPARATORS	**Periods**
Basics of Metrology Scope of Metrology, basic units, important terminology, Measurement – Need, Process, Role in quality control; Factors affecting measurement - SWIPE; international standardization, the bureau of Indian standards - important elements of measurements - methods of measurements. Precision - accuracy - definition - factors affecting the accuracy of the measuring system - general rules for accurate measurements - precautions for use of instruments so as to avoid in accuracy in measurements - reliability – definition, Measurement uncertainty, Measurement system analysis, Compare systematic error and random error, Selection of measuring instruments - Calibration of measuring instruments. **Linear Measurements** Linear Measuring Instruments – Vernier caliper, Micrometer, Vernier height gauge, Depth Micrometer, bore gauge, Telescoping gauge; Gauge blocks – Use and precautions, possible sources of errors in micrometers – slip gauges - requirements – Indian standard – care and use. **Comparator** Comparators – Working and advantages - Types - Mechanical and Pneumatic Comparators.	8

Practical Exercises:

Ex. No	Name of the Experiment	Hours
1	VERNIER CALIPER i) Measure the dimensions of ground MS flat/Cylindrical bush using Vernier Caliper. ii) Compare the results with Digital Vernier Caliper.	5

2	OUTSIDE MICROMETER i) Measure the diameter of a wire using micrometer ii) Compare the results with a digital Outside micrometer.	5
3	INSIDE MICROMETER i) Measure the inside diameter of the bore of a bush cylindrical component using Inside micrometer ii) Compare the results with digital inside micrometer.	5
4	SLIP GAUGES Measure the thickness of ground MS plates using slip gauges.	5
5	VERNIER HEIGHT GAUGE Measure the height of gauge blocks or parallel bars using vernier height gauge.	5
6	MECHANICAL COMPARATOR Find out the measurement of a given component and Compare with a standard component using a mechanical comparator and slip gauge.	5
THEORY		
UNIT II: ANGULAR MEASUREMENTS, CMM, SURFACE & ADVANCED METROLOGY		
Angular Measurements: Angular measuring instruments – Bevel protractor, Angle gauges, Precision level, Sine bar, Autocollimator. Opto-mechanical measurements using a measuring microscope and Profile projector. Measurement of Screw threads – Single element measurements – Pitch Diameter, Lead, Pitch. Measurement of Gears – purpose – Analytical measurement – Runout, Pitch variation, Tooth profile, Tooth thickness, Lead. **Coordinating measuring Machine:** Basic concept of CMM – Types of CMM – Constructional features – Probes – Accessories – Software – Applications. **Advanced Metrology:** Basic concepts of lasers - types of lasers - laser and LED based distance measuring instruments.		7

1020234640	METROLOGY AND MEASUREMENTS	L	T	P	C
PRACTICUM		1	0	4	3

Practical Exercises:		
Ex. No.	**Name of the Experiment**	
7	UNIVERSAL BEVEL PROTRACTOR Measure the angle of a V-block/Taper Shank of Drill/ Dovetail using universal bevel protractor.	5
8	SINE BAR Measure the angle of the machined surface using sine bar with slip gauges.	5
9	SCREW THREAD MICROMETER Measure the geometrical dimensions of V-Thread using screw thread micrometer.	5
10	GEAR TOOTH VERNIER CALIPER Measure the geometrical dimensions of spur gear using gear tooth vernier caliper.	5
	Activity + Revision + Assessment Test	10
	Total	75

Suggested List of Student Activity

1. Each student writes and submits the assignment on the topic of Methods of measurements, Precautions to avoid inaccuracy in measurements, Selection and Calibration of measuring instruments.
2. Four students can be grouped as a batch to measure the various dimensions of taper shank drill bit and spur gear and submit the activity report. The activity report should have the diagram and various dimensions of the taper shank drill bit and spur gear.
3. Visit Industry to study the working of the CMM. Prepare a report.
4. Visit Industry to study the working of the Profile Projector. Prepare a report.
5. Study the various types of Comparator. Prepare a report.

1020234640	METROLOGY AND MEASUREMENTS	L	T	P	C
PRACTICUM		1	0	4	3

Text and Reference books.

1. R. K. Jain, Engineering Metrology, 22 nd Edition, Khanna Publishers, 2022.
2. N. V. Raghavendra and L. Krishnamurthy, Engineering Metrology and Measurements, Oxford University Press India, 2013.
3. R. K. Rajput, Engineering Metrology and Instrumentation, S.K. Kataria & Sons, 2nd Edition, 2013.
4. Samir Mekid, Metrology and Instrumentation: Practical Applications for Engineering and Manufacturing, John Wiley & Sons, Inc., 2021.
5. Anand K. Bewoor & Vinay A. Kulkarni, Metrology & measurement, Tata McGraw-Hill, 2009.
6. Rega Rajendra, Principles of Engineering Metrology, Jaico Publishing House, 2008.

Web-based/Online Resources

- https://archive.nptel.ac.in/courses/112/104/112104250/

END SEMESTER EXAMINATIONS – PRACTICAL EXAM.

SCHEME OF EVALUATION

PART	DESCRIPTION	MARKS
A	Procedure / Preparation	10
B	Observation / Dimensions	20
C	Accuracy	20
D	Result	10
E	Viva voce	10
F	Written test	30
		100

Note: For the written test 30 MCQ shall be asked from the theory portions.

1020234640	METROLOGY AND MEASUREMENTS	L	T	P	C
PRACTICUM		1	0	4	3

LIST OF EQUIPMENTS

S. No	Name of the Equipment	Quantity required
1	Vernier Caliper	2 nos
2	Digital Vernier Caliper	2 nos
3	Outside Micrometer	2 nos
4	Digital Outside Micrometer	2 nos
5	Inside Micrometer	2 nos
6	Digital Inside Micrometer	2 nos
7	Slip Gauges	2 nos
8	Vernier Height Gauge	1 no
9	Surface Plate	2 nos
10	Dial Indicator (0-10)	2 nos
11	Universal Bevel Protractor	2 nos
12	Sine Bar with Slip gauges	2 nos
13	Screw Thread Micrometer	2 nos
14	Gear Tooth Vernier Caliper	1 no
15	Mechanical Comparator	1 No.
	Consumable	Sufficient Quantity

1020235110	ELEMENTS OF MACHINE DESIGN	L	T	P	C
THEORY		3	0	0	3

Introduction

Design plays a major role in developing engineering and technology. Machine Design is the creation of new and better machines and improving the existing ones. Elements Design is the process of selection of the material, shape, size and arrangement of mechanical elements so that the machine will perform its task. A process which includes design of all parts of a machine subjected to carry the forces without failure by transforming other forms of energy into mechanical energy.

Course Objectives

The objective of this course is to enable the student to apply the various design procedures, principles and various stresses in the elements of machine design.

1. To understand and apply to Solve the problems of various types of failures, and design of joints.
2. To apply the Design procedure of keys and coupling.
3. To apply the Design procedure of belt drives and selection of belt drives.
4. To apply the design procedure of supported rotating element.
5. To understand the concept of Computer Aided Design.

Course Outcome

After successful completion of this course, the students can able to

CO1: Calculate the dimensions of shaft and key for a given application

CO2: Design a coupling for a given application.

CO3:Select proper belt drive from manufacturers catalogue for power transmission under specified condition

CO4: Design journal bearing and spur gear based on a given applications

CO5: Practice the CAD activities in various stages of product design

Prerequisites

Mathematics, Engineering Mechanics, Strength of Materials, and Engineering Drawing.

1020235110	ELEMENTS OF MACHINE DESIGN	L	T	P	C
THEORY		3	0	0	3

Assessment Methodology

	Continuous Assessment (40 marks)				End Semester Examination (60 marks)
	CA1	**CA2**	**CA3**	**CA4**	
Mode	Written test (Two units)	Written test (Another Two units)	Quiz MCQ (Online / Offline)	Model Examination	Written Examination
Duration	2 Periods	2 Periods	1 Hour	3 Hours	3 Hours
Exam Marks	40	40	60	100	100
Converted to	15	15	5	20	60
Marks	15		5	20	60
Tentative Schedule	6th Week	12th Week	13-14th Week	16th Week	

CA1 and CA2: Assessment written test should be conducted for 40 Marks for two units. The marks scored will be converted to 15 Marks. Best of one will be considered for the internal assessment of 15 Marks.

CA1and CA2, Assessment test should be conducted for two units as below.

Answer Two questions (2 X 20 Marks = 40 Marks).

Four questions will be asked, students should write Two questions. Each unit Two questions can be asked. Each question may have subdivisions. Maximum two subdivisions shall be permitted.

CA3: 60 MCQ can be asked by covering the entire portion. It may be conducted by Online / Offline. The answer scripts of every student (online / offline) for this assessment should be kept for records and future verification. The marks scored should be converted to 5 marks for the internal assessment.

CA4: Model examination should be conducted as per the end semester question pattern. The marks should be converted to 20 marks for the internal assessment.

Question Pattern:

Answer Five questions by selecting One question from each unit. Each question carries 20 marks each.

Two questions will be asked from every unit, students should write any One question. The question may have two subdivisions only.

CO-PO Mapping

CO/PO	PO1	PO2	PO3	PO4	PO5	PO6	PO7
CO1	3	3	3				
CO2	3	3	3				
CO3	3	3	3				
CO4	3	3	3				
CO5	3	2	3				

1020235110	ELEMENTS OF MACHINE DESIGN	L	T	P	C
THEORY		3	0	0	3

Syllabus Contents.

THEORY		
Unit I	**Fundamentals of Design and Stresses**	
Introduction about Component Design. Engineering materials - Factors affecting selection of materials BIS designation of Ferrous materials – Preferred number - Factor of safety and allowable stress - Stresses: Tension, Compression, Shear, bearing pressure intensity, crushing, bending and torsion- Problem. Composite Material, types, property and applications. Creep strain and Creep Curve- Fatigue, S-N curve, Endurance Limit Stress Concentration. Theories of Elastic Failures Principal normal stress theory, Maximum shear stress theory & Maximum distortion energy theory.		8
Unit II	**Design Of Coupling and Keys**	
Couplings, Requirements of good couplings, types – design of rigid protected type flange couplings marine coupling pin type flexible couplings (description only). Keys - Types of keys - design of sunk keys only - Effect of keyways on shaft - problems.		9
Unit III	**Design of Flat Belts and V-Belts**	
Flat Belts: Types of belts - materials for belt - types of belt drives - Speed ratio - effect of slip - length of flat belts -Tension Ratio. centrifugal tension - power transmitted - condition for maximum power - transmission - Initial Tension - Design procedure of flat belts - Design of flat belt based on manufacturer's data only – problems. V-belt drive - comparison with flat belt drive - designation of V belts - length of belt - power transmitted - Design of V-belt using manufacturer's data only - Problem.		10

Unit IV	Design of Bearings	
Bearings: Classifications of bearings - sliding contact and rolling contact bearings - radial and thrust bearings - roller bearing – types. Designation of ball bearings - materials used for bearings - design of journal bearings heat generated, heat dissipated, cooling oil requirement - Problems. Design of journal bearings problems, design based on approved date book only. (No problem from dimensionless parameters)		9
Unit V	**Computer Aided Design (CAD) and Geometric Modelling**	
CAD – Roles of CAD in design - Development and uses – applications, advantages, Product life cycle. Design process: Sequential Engineering – Concurrent Engineering, Value Engineering, Lean Manufacturing System. Geometric modelling, Solid modelling representation in CAD, Solid modelling approaches, Constructive Solid Geometry, Boundary representation - Comparison - Finite Element analysis - Prototype. (New Product Development technique)		9

NOTE: Printed approved Design Data Books are permitted for all examinations / Approved data books abstract copy attested by the HOD and Principal can be used.

Suggested list of Students Activity

1. Online MCQ shall be conducted for each unit.
2. Presentation and Seminar can be conducted.
3. Seminars about the product development process can be given.
4. Simulation practices of design and analysis can be given.

1020235110	ELEMENTS OF MACHINE DESIGN	L	T	P	C
THEORY		3	0	0	3

Reference Books

1. Machine Design, Pandya & Shah,20th Edn. 2015, Charotar Publishing House.
2. Machine Design, T. V. Sundararajamoorthy & N. Shanmugam, Revised Edition June-2018–Anuradha Publications.
3. Design Data Book – by PSG College of Technology, DPV Printers.
4. A textbook of Machine Design, R.S. Khurmi & J.K.Gupta, Edn. 18,2005, S. Chand Publishing.
5. Design of Machine Elements, Bandari, 4th Edition 2016, Tata McGraw-Hill , New Delhi.
6. Mechanics of Composite Materials, Second Edition, 2006 Autar K. Kaw, Taylor & Francis Group.
7. "R.Radhakrishnan, and S.Subramanian, "CAD/CAM/CIM"2018, New Age International Pvt Limited.

Web Reference

- https://nptel.ac.in/courses/112/105/112105125/
- https://nptel.ac.in/courses/112/105/112105124/
- https://nptel.ac.in/courses/112/106/112106137/

END SEMESTER QUESTION PATTERN – Theory Exam,

DURATION: 3 Hrs. **Max. Marks : 100**

Question Pattern:

Answer Five questions by selecting One question from each unit. Each question carries 20 marks each. Printed Design Data Book and Approved abstract of the Data Book can be permitted.

Instruction to Question setters.

Two questions will be asked from every unit, students should write any One question. The question may have two subdivisions only.

1020235230	INDUSTRIAL ENGINEERING AND MANAGEMENT	L	T	P	C
PRACTICUM		3	0	2	4

Introduction

In the Indian Economy, Industries and enterprises always find a prominent place. After globalization, the government of India has announced a liberalization policy of starting an enterprise which resulted in the mushroom growth of industries. The present day students should be trained not only in manufacturing processes but also in managing activities of industries. Training must be imparted to students not only to shape them as technicians but also as good managers. The knowledge about plant, safety, work study techniques, personnel management and financial management will definitely mould the students as managers to suit the industries. Due to the presence of such personalities the industries will leap for better prosperity and development.

Course Objectives

The objective of this course is to enable the student to

- To study the different types of layout.
- To study the safety aspects and its impacts on an organization.
- To study different work measurement techniques.
- To study the staff selection procedure and training of them.
- To study capital and resources of capital.
- To study inventory control systems.
- To study engineering ethics and human values.

Course Outcomes

On successful completion of this course, the student will be able to

CO1: Select the plant layout by incorporating plant safety procedure

CO2: Apply work study principles as a tool for plant management

CO3: Describe the principles of management used in industries

CO4: Apply various inventory control techniques in material management

CO5: Describe modern management techniques used in shop floor

.

1020235230	INDUSTRIAL ENGINEERING AND MANAGEMENT	L	T	P	C
PRACTICUM		3	0	2	4

Pre-requisites

Basic knowledge of industries and its practices (through Industrial Visits)

CO/PO Mapping

CO / PO	PO1	PO2	PO3	PO4	PO5	PO6	PO7
CO1	3						
CO2	3			2			
CO3	3						
CO4	3			2			
CO5	3						

Legend: 3-High Correlation, 2-Medium Correlation, 1-Low Correlation

Instructional Strategy

- Conduct group discussions on plant safety
- Encourage students to know about the share market details(BSE,NSE)
- Use powerpoint presentations.

1020235230	INDUSTRIAL ENGINEERING AND MANAGEMENT	L	T	P	C
PRACTICUM		3	0	2	4

Assessment Methodology:

	Continuous Assessment (40 marks)				End Semester Examination (60 marks)
	CA1	**CA2**	**CA3**	**CA4**	
Mode	Written Test Theory (Any Two Units)	Written Test Theory (Another Two Units)	Practical Test (All Exercises)	Written Test (Complete Theory Portions)	Written Examination (Complete Theory Portions)
Duration	2 Periods	2 Periods	3 Hours	3 Hours	3 Hours
Exam Marks	50	50	100	100	100
Converted to	10	10	15	15	60
Marks	10		15	15	60
Tentative Schedule	6th Week	12th Week	15th Week	16th Week	

Note:

- **CA1 and CA2:** Assessment written test should be conducted for 50 Marks. The marks scored will be converted to 10 Marks for each test. Best of one will be considered for the internal assessment of 10 Marks.

  CA1 and CA2, Assessment written test should be conducted for two units as below.

  Answer any Five questions. (5 X 10 Marks = 50 Marks).

  Eight questions will be asked, students should write Five questions.

  Each unit Four questions can be asked. Each question may have subdivisions. Maximum two subdivisions shall be permitted.
- **CA 3:** All the exercises/experiments should be completed and kept for the practical test. The students shall be permitted to select any one experiment by lot for the test. The practical test should be conducted as per the scheme of evaluation as below. The marks awarded for 100 marks will be converted to 15 Marks for the internal mark.

Practical documents should be maintained for every exercise / experiment immediately after completion of the practice. The practical document should be submitted for the practical test. Each exercise/experiment should be evaluated for 10 Marks. The total marks awarded should be converted to 30 Marks for the practical test as per the scheme of evaluation as below.

The details of the practical documents to be prepared as per the instruction below.

Each exercise procedure and steps should be completed on the day of practice. The same shall be evaluated for 10 marks on the day or next day of practice before commencement of the next exercise.

This documentation can be carried out in a separate notebook or a printed manual or a file with documents. The reading and calculations and graph should be written by the student manually in the document.

The evaluated practical document should be submitted for the Practical Test (CA3). The mark scored by the students should be converted to 30 marks. The same should be included as per the allocation in the practical test.

The detailed date of the practices and its evaluations should be maintained in the course logbook. The log book and the practical documents should be submitted for the verification by the Flying Squad and DOTE Official.

SCHEME OF EVALUATION - Practical Test

Sl.No.	Description	Marks
A	Aim	10
B	Procedure / Steps	20
C	Explanation	20
D	Report	10
E	Practical document (All Practicals)	30
F	Viva Voce	10
	Total	100

1020235230	INDUSTRIAL ENGINEERING AND MANAGEMENT	L	T	P	C
PRACTICUM		3	0	2	4

CA4: Model examination should be conducted for complete theory portions as per the end semester question pattern. The marks awarded should be converted to 15 marks for the internal assessment.

Question Pattern:

Answer Ten questions by selecting two questions from each unit. Each question carries 10 marks each.

Four questions will be asked from every unit, students should write any two questions. The question may have two subdivisions only.

Syllabus Contents.

THEORY PORTION

Unit I	**PLANT ENGINEERING AND PLANT SAFETY**	
Plant Engineering : Plant – Selection of site of industry – Plant layout – types – process, product and fixed position – Plant maintenance – importance – Break down maintenance, preventive maintenance and scheduled maintenance. Plant Safety: Importance – Industrial safety and procedure-Improper handling-accident - causes and cost of an accident - accident proneness - prevention of accidents-Settlement of industrial disputes - Indian Factories Act 1948 and its provisions related to health, welfare and safety.		9
Unit II	**METHOD STUDY AND WORK MEASUREMENT**	
Method Study: Definition – Ergonomics-Basic procedure for conduct of method study – Tools used – Operation process chart, Flow process chart, two handed process chart- Man machine chart. Work Measurement: Definition – Basic procedure in making a time study – Cycle time and Total Time-Techniques of work measurement - Ratio delay study, Synthesis from standard data, analytical estimating, Predetermined Motion Time System(PMTS).		9

1020235230	INDUSTRIAL ENGINEERING AND MANAGEMENT	L	T	P	C
PRACTICUM		3	0	2	4

Unit III	**PRINCIPLES OF MANAGEMENT**	
Principles of Management: Definition of management – Administration - Organization – F.W. Taylor's and Henry Fayol's Principles of Management - Selection procedure – Training of workers – Apprentice training – On the job training and vestibule school training - wages and salary administration – Components of wages.		9
Unit IV	**FINANCIAL AND MATERIAL MANAGEMENT**	
Financial Management: Resources of capital – shares-preference and equity shares – debentures-Factory costing – direct cost – indirect cost – Factory overhead – Selling price of a product – Profit –. Depreciation – Causes –Methods - Straight line, sinking fund and percentage on diminishing value method Material Management: Objectives of good stock control system – ABC analysis of inventory – Procurement and consumption cycle – Minimum Stock, Lead Time, Reorder Level - Economic order quantity – problems –Supply chain Management - Purchasing Procedure- Bin card.		9
Unit V	**MODERN MANAGEMENT TECHNIQUES**	
5S concept - Just in Time(JIT) - Kaizen - ERP - Kanban - SQC - SPC - PPC - TPM - TQM - Quality tools - 7QC Tools - PDCA Cycle Six sigma - Industry 4.0 – Internet of things(IoT) - Cloud computing - AI and Machine Learning-Management Information System(MIS).		9
	Theory Portions	45
	Practical	20
	Practice + Revision + Test	10
	Total	75

1020235230	INDUSTRIAL ENGINEERING AND MANAGEMENT	L	T	P	C
PRACTICUM		3	0	2	4

PRACTICAL EXERCISES **20 Periods**

1. **TO STUDY AND PREPARE OPERATION PROCESS CHART (OPC)FOR GIVEN ASSEMBLY AND SITUATION.**

   Assemble a Pedestal Electric Fan With Following Parts

   - Base,
   - pedestal ,
   - motor head ,
   - switch set,
   - rear guard,
   - front guard,
   - guard ring lock,
   - blade,
   - screws

2. **To Study & Prepare Flow Process Chart (FPC) for the given assembly.**

   Construct a Flow Process Chart for the following:

   - Move bar stock from store to hacksaw Dist. 8 meter
   - Cutting of bar stock Time 4 min
   - Move to lathe machine Dist. 6-meter
   - Turning Process Time 5 min
   - Move to milling machine Dist. 7-meter
   - Wait for milling machine Time 2 min
   - Milling keyway Time 10 min

3. **To study & Prepare Man-Machine (Multiple Activity) Chart for the given situation**

   A chamfering, turning and threading operation is done on a job on lathe machine. Information of that operation is recorded as under. Show this information on man and machine chart.

   - Carry bar stock from the store. 1 min
   - To fix the job in lathe chuck. 2 min
   - To carryout manual turning of the job. 1.5 min

- To carryout chamfering operation on job 1 min
- To carry out threading operations on the job. 2 min
- To bring the saddle back and rearrange it 0.5 min
- To carry out threading work on the job. 1.5 min
- Inspection of the job. 1 min
- To remove the job from the lathe chuck. 0.5 min
- Carrying completed work piece to store 1 min

4. **To study & Calculate coefficient of correlation for time study person using performance rating technique.**

Find actual rating using basic time. Plot a graph of actual rating v/s observed rating.

- At a time one student will walk a distance of 25 feet in a normal way.
- Another student (time-keeper) will note down the time taken for that student to walk.
- All the remaining students will assign ratings to the student walking in the observation table.
- Time-keeper will give time for that student to all the students.
- Repeat the same procedure changing the time-keeper and the student walking
- Find basic time using observations.

5. **To study & Calculate standard time for the given job.**

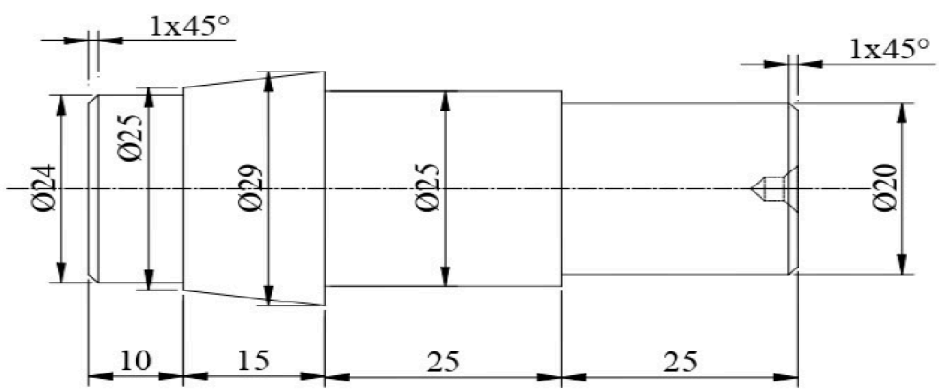

Basic time = Observed time × Rating of worker /Standard Rating

Work Content= Basic time + Relaxation & Incidental Allowances

Standard Time= Work Content + Other Allowances

6. To Draw Two Handed Process Chart For Bolt, Washer & Nut Assembly

To draw left and right hand process charts and to conduct time study for the bolt, washer & nut assembly of present and improved methods.

$$\%\,TIME\ SAVED = \frac{AVERAGE\ TIME\ TAKEN\ FOR\ AN\ ASSEMBLY\ OLD\ METHOD - AVERAGE\ TIME\ TAKEN\ FOR\ AN\ ASSEMBLY\ NEW\ METHOD}{AVERAGE\ TIME\ TAKEN\ FOR\ AN\ ASSEMBLY\ OLD\ METHOD}$$

APPARATUS REQUIRED:

1. Stop watch
2. Brass spindles
3. Nylon washers
4. Lock washers
5. Hexagonal nuts

Suggested List of Students Activity

Presentation/seminars by the students on modern management techniques.

Explore various plants during industrial visits.

Find the selling price of a product using ladder diagrams.

Find depreciation values of vehicles.

Find standard time for a particular job (in lathe) using stop watch time study methods.

Reference

1. S.C.Sharma & T.R. Banga, Industrial Engineering and Management, 2nd Edition, Khanna Book Publishing, 2022.
2. S.Chand, Industrial Engineering and Production Management, 3rd Edition, S. Chand Publishing, 2018.
3. M.P.Poonia & S.C.Sharma, Industrial Safety and Maintenance Management,1 st Edition, Khanna Publishing, 2021.

1020235230	INDUSTRIAL ENGINEERING AND MANAGEMENT	L	T	P	C
PRACTICUM		3	0	2	4

Web-based Online Resources

- https://youtu.be/jFDWlKayrTc?si=oe4glWk9Qb18wxUx
- https://youtu.be/yhywrCChJBQ?si=7eXkcTyAsH8TNP6x

END SEMESTER QUESTION PATTERN - Theory Exam

Duration: 3 Hrs. **Max. Marks: 100**

Note: Answer Ten questions by selecting two questions from each unit. Each question carries 10 marks each.

Instruction to the Question Setters

Four questions will be asked from every unit, students should write any two questions for 10 marks. The question may have two subdivisions only.

1020235331	**Modern QC Tools**	L	T	P	C
PRACTICUM		2	0	2	3

Introduction

Quality Control (QC) is a critical aspect of manufacturing and service industries, ensuring that products and services meet predefined standards and customer expectations. Over the years, QC has evolved significantly, incorporating advanced techniques and tools to improve efficiency, accuracy, and reliability. Modern Quality Control tools are a combination of traditional methodologies and innovative technologies designed to enhance the quality management process.

Course Objectives

The objectives of this course is enable the student to

- Explain the basic Quality concepts and its objectives.
- Explain the Total Quality Management Principles.
- To learn the concept and properties of various Continuous improvement methods.
- Appreciate the benefits of implementing 5S , Kaizen concepts.
- Collect and classify various data.
- Determine the process capability of a manufacturing process through the construction of various control charts for variables and attributes.
- Knowledge and practice on construction of Quality and Management tools.

Course Outcomes

On successful completion of this course, the student able to

CO1: Explain the Quality concepts and techniques used in industries.

CO2: Acquire knowledge about various continuous improvement methods and its implementation techniques.

CO3: Interpret types of data on various control charts for improving the process.

CO4: Create QC charts using Seven tools of quality for problem solving and continuous improvement processes.

CO5: Adopt the seven management tools to identify improvement opportunities and develop implementation plans.

1020235331	**Modern QC Tools**	L	T	P	C
PRACTICUM		2	0	2	3

Pre-requisites

Knowledge of basic Science

CO/PO Mapping

CO / PO	PO1	PO2	PO3	PO4	PO5	PO6	PO7
CO1	3	1	-	1	1	2	1
CO2	3	2	1	1	2	1	1
CO3	2	2	1	2	1	1	1
CO4	1	1	1	1	1	1	1
CO5	1	1	1	1	1	1	1

Legend: 3-High Correlation, 2-Medium Correlation, 1-Low Correlation

Instructional Strategy

Active Learning: Activities for active learning can include think-pair-share strategies as well as kin-esthetic learning environment.Teachers can start a discussion to make sure students take ownership over their own participation and talk through new ideas and skills with peers. Teachers guide students as they construct their own knowledge and understanding.

Hands-on-Training: Conduct demonstrations and hands on training is all about applying the knowledge you have learned in training into practice.

Real time Learning: Instructors shall encourage the students to implement the techniques in their own place / Lab through the Industry-Institute interactions.

1020235331	**Modern QC Tools**	L	T	P	C
PRACTICUM		2	0	2	3

Assessment Methodology:

	Continuous Assessment (40 marks)				**End Semester Examination (60 marks)**
	CA1	**CA2**	**CA3**	**CA4**	
Mode	Written Test Theory (Any Two Units)	Written Test Theory (Another Two Units)	Practical Test (All Exercises)	Written Test (Complete Theory Portions)	Written Examination (Complete Theory Portions)
Duration	2 Periods	2 Periods	3 Hours	3 Hours	3 Hours
Exam Marks	50	50	100	100	100
Converted to	10	10	15	15	60
Marks	10		15	15	60
Tentative Schedule	6th Week	12th Week	15th Week	16th Week	

Note:

- **CA1 and CA2:** Assessment written test should be conducted for 50 Marks. The marks scored will be converted to 10 Marks for each test. Best of one will be considered for the internal assessment of 10 Marks.

  CA1 and CA2, Assessment written test should be conducted for two units as below.

  Answer any Five questions. (5 X 10 Marks = 50 Marks).

  Eight questions will be asked, students should write Five questions.

  Each unit Four questions can be asked. Each question may have subdivisions. Maximum two subdivisions shall be permitted.

- **CA 3:** All the exercises/experiments should be completed and kept for the practical test. The students shall be permitted to select any one experiment by lot for the test. The

practical test should be conducted as per the scheme of evaluation as below. The marks awarded for 100 marks will be converted to 15 Marks for the internal mark.

Practical documents should be maintained for every exercise / experiment immediately after completion of the practice. The practical document should be submitted for the practical test. Each exercise/experiment should be evaluated for 10 Marks. The total marks awarded should be converted to 30 Marks for the practical test as per the scheme of evaluation as below.

The details of the practical documents to be prepared as per the instruction below.

Each experiment procedure and steps should be completed on the day of practice. The same shall be evaluated for 10 marks on the day or next day of practice before commencement of the next exercise.

This documentation can be carried out in a separate notebook or a printed manual or a file with documents. The reading and calculations and graph should be written by the student manually in the documents.

The evaluated practical document should be submitted for the Practical Test (CA3). The mark scored by the students should be converted to 30 marks. The same should be included as per the allocation in the practical test.

The detailed date of the practices and its evaluations should be maintained in the course logbook. The log book and the practical documents should be submitted for the verification by the Flying Squad and DOTE Official.

SCHEME OF EVALUATION - Practical Test

Sl.No.	Description	Marks
A	Aim / Description	10
B	Procedure	20
C	Presentation	30
D	Practical document (All Practicals)	30
E	Viva Voce	10
	Total	100

1020235331	Modern QC Tools	L	T	P	C
PRACTICUM		2	0	2	3

CA4: Model examination should be conducted for complete theory portions as per the end semester question pattern. The marks awarded should be converted to 15 marks for the internal assessment.

Question Pattern:

Answer Ten questions by selecting two questions from each unit. Each question carries 10 marks each.

Four questions will be asked from every unit, students should write any two questions. The question may have two subdivisions only.

Syllabus Contents.

Unit I	**BASICS OF QUALITY CONCEPTS**	
Definitions of the terms – Inspection, Quality, Quality Planning , Quality Control , Quality Assurance , Quality Management - Dimensions of quality –Basics of Total Quality– Quality Statements – Strategic Planning – Evolution of Quality Management – Quality Awards - Introduction to TQM – Pillars of TQM - Characteristics – Basic concepts – Quality Objectives – Team Building - Barriers to TQM implementation – Potential benefits of TQM – Quality council – Duties – Responsibilities –Strategic planning – Factors influencing Quality Costs - Customer Focus – Employee Involvement		6
Unit II	**CONTINUOUS PROCESS IMPROVEMENT**	
Input / Output process model – Juran Trilogy – PDCA (Deming Wheel) cycle – 5S Concepts – SEIRI, SEITON, SEISO, SEIKETSU and SHITSUKE – needs and objectives – effective implementation of 5S concepts in an organisation – Kaizen – Gemba Kaizen – Housekeeping- Quality Circles and the Trade Unions – Reengineering - Characteristics– Advantages -Criticism of Reengineering-Supplier relationship		6
Unit III	**STATISTICAL PROCESS CONTROL**	

1020235331	**Modern QC Tools**	L	T	P	C
PRACTICUM		2	0	2	3

Definition – Statistics Data- definition , types and uses. Measures of general Tendency and Dispersion – Mean – Median – Mode –Introduction to measures of dispersion – Population and Sample – Statistical Process Control and SQC definition– Process Capability – Sampling -Control Charts and its types – Comparison of Variable and attributes – X bar and R (Problems) , Attributes – p , np and c Charts.-Process capability analysis , Definition, steps and its uses.	6
Unit IV	**SEVEN TOOLS OF QUALITY**
Seven tools of quality (Q-7 tools) – Check sheet – Histogram – Cause and effect diagram - Pareto diagram – Scatter diagram - Flow charts – Control charts - Construction of above tools , types , Uses and Limitations	6
Unit V	**NEW SEVEN MANAGEMENT TOOLS , QUALITY MANAGEMENT SYSTEMS**
New seven management tools- Flow and its uses - Affinity diagram – Interrelationship digraph or Relationship diagram - Tree diagram - Matrix diagram-Prioritization matrices – Process decision program chart – Activity network diagram. -Construction of above diagrams. Six sigma –Objectives , Methodology and Benefits – DMAIC -Quality Management System – ISO 9000 , ISO 14000 Documentation and Implementation – Total Productive Maintenance –Concepts and Needs.	6
Theory portions	30
Practical Exercise	20
Revision + Test	10
Total	60

PRACTICAL EXERCISE

1. The Six Sigma process typically follows the DMAIC framework: Define, Measure, Analyze, Improve, and Control.
2. Write the detailed steps for Lean Manufacturing.
3. Explain the statistical methods to monitor and control a process in SPC.

1020235331	Modern QC Tools	L	T	P	C
PRACTICUM		2	0	2	3

4. Write steps to practice kaizen.
5. Write the procedure to followed for Failure Mode and Effects Analysis (FMEA)
6. Write the step by procedure for the RCA method of problem-solving.
7. Implement 5S on the shop floor and document the details.
8. Create the SPC for the dataset. Use control charts
9. Carry out the Root Cause Analysis (RCA) for the sample
10. Carry out Pareto Analysis. and document the finding.

Suggested List of Students Activity

Quality Audits and Inspections:

- Participating in regular quality audits and inspections of manufacturing processes and products.
- Learning to use inspection tools and techniques to identify defects and ensure compliance with quality standards.
- Documenting findings and suggesting improvements to enhance product quality.

Statistical Process Control (SPC) Projects:

- Using SPC tools to monitor and control manufacturing processes.
- Collecting and analyzing data to identify trends, variations, and potential issues.
- Implementing corrective actions based on data analysis to maintain consistent product quality.

Root Cause Analysis (RCA) and Problem-Solving Activities:

- Engaging in RCA to investigate quality issues and determine their underlying causes.
- Using problem-solving methodologies such as the 5 Whys, Fishbone Diagrams, and Failure Mode and Effects Analysis (FMEA).
- Developing and implementing action plans to prevent recurrence of quality issues.

Lean Manufacturing and Continuous Improvement Initiatives:

- Participating in Lean Manufacturing activities to eliminate waste and improve efficiency.
- Engaging in continuous improvement projects such as Kaizen events, 5S implementation, and value stream mapping.

1020235331	Modern QC Tools	L	T	P	C
PRACTICUM		2	0	2	3

- Contributing to the development of standard operating procedures (SOPs) and best practices to sustain high-quality standards.

Reference

1. "Quality Control and Total Quality Management" by P.L. Jain, Tata McGraw Hill Education.
2. "Total Quality Management" by Dale H. Besterfield, Carol Besterfield-Michna, Glen H. Besterfield, Mary Besterfield-Sacre, Pearson Education.
3. "Statistical Quality Control" by Eugene L. Grant, Richard S. Leavenworth, Tata McGraw Hill Education.
4. "Total Quality Management: Principles and Practice" by S. K. Mandal, Vikas Publishing House.
5. "Six Sigma for Business Excellence: Approach, Tools and Applications" by Hemant Urdhwareshe, Pearson Education
6. "Quality Assurance and Quality Control in the Analytical Chemical Laboratory: A Practical Approach, Second Edition" by Piotr Konieczka, Jacek Namieśnik, CRC Press (Distributed in India).

END SEMESTER EXAMINATION QUESTION PATTERN – Theory Exam

Duration: 3 Hrs. **Max. Marks: 100**

Note: Answer Ten questions by selecting two questions from each unit. Each question carries 10 marks each.

Instruction to the Question Setters

Four questions will be asked from every unit, students should write any two questions for 10 marks. The question may have two subdivisions only.

1020235332	Composite Materials	L	T	P	C
PRACTICUM		2	0	2	3

Introduction

The field of composite materials has seen significant advancements. The development of new composite manufacturing techniques has made it feasible to modify the characteristics of traditional materials to meet specifications. Diploma holders in this course are required to make use of different composite materials and its manufacturing techniques for different end use applications. To do this, it is essential to instruct them on the fundamentals of metal matrix composites, ceramic composites, polymer matrix composites, and more modern advanced composites, as well as their properties, production methods, and mechanical testing applications. This course seeks to increase understanding of the several types of composite materials used in industries, including their types, testing, and applications.

Course Objectives

The objective of this course is to prepare the student.

- To understand the types of composite materials, matrix, and reinforcements.
- To equip with knowledge on polymer matrix composites and their production
- To impart knowledge in the manufacturing process and application of various types of metal matrix composites and ceramic composites.
- To become familiar with the recent developments in polymer composite manufacturing.
- To acquire knowledge of selecting suitable composites for industrial applications and the response of composite structures subjected to mechanical loading.

Course Outcomes

On successful completion of this course, the student will be able to,

CO1: Identify the types of composites and the properties of matrix and reinforcements.

CO2: Familiarize the methods used to manufacture polymer matrix composites(PMC) and its applications in different environments.

CO3: Explain the manufacturing methods, concepts and applications of metal matrix composite(MMC) and ceramics composites.

CO4: Explain the recent development in composite manufacturing and its applications.

CO5: Apply the concept of composite materials for various applications with the support of mechanical testing.

1020235332	**Composite Materials**	L	T	P	C
PRACTICUM		2	0	2	3

Pre-requisites

Knowledge about the different materials, Basic Chemistry. Material Science

CO/PO Mapping

CO / PO	PO1	PO2	PO3	PO4	PO5	PO6	PO7
CO1	3			1			1
CO2	3			1			1
CO3	3			1			1
CO4	3			1			1
CO5	3			1			1

Legend: 3-High Correlation, 2-Medium Correlation, 1-Low Correlation1

Instructional Strategy

It is advised that teachers take steps to pique pupils' attention and boost their curiosity to learn.

Implement task-based learning activities where students work on specific tasks or projects.

Incorporate technology tools and resources, such as online platforms, interactive multimedia, and virtual communication tools, to enhance engagement and provide additional practice opportunities.

Incorporate formative and summative assessments to gauge student progress and provide targeted feedback.

Throughout the course, a theory-demonstrate-practice-activity strategy may be used to ensure that learning is outcome and employability based.

All demonstrations/Hand-on practices may be followed in the real environment as far as possible.

1020235332	**Composite Materials**	L	T	P	C
PRACTICUM		2	0	2	3

Assessment Methodology:

	Continuous Assessment (40 marks)				End Semester Examination (60 marks)
	CA1	CA2	CA3	CA4	
Mode	Written Test Theory (Any Two Units)	Written Test Theory (Another Two Units)	Practical Test (All Exercises)	Written Test (Complete Theory Portions)	Written Examination (Complete Theory Portions)
Duration	2 Periods	2 Periods	3 Hours	3 Hours	3 Hours
Exam Marks	50	50	100	100	100
Converted to	10	10	15	15	60
Marks	10		15	15	60
Tentative Schedule	6th Week	12th Week	15th Week	16th Week	

Note:

- **CA1 and CA2:** Assessment written test should be conducted for 50 Marks. The marks scored will be converted to 10 Marks for each test. Best of one will be considered for the internal assessment of 10 Marks.

  CA1 and CA2, Assessment written test should be conducted for two units as below.

  Answer any Five questions. (5 X 10 Marks = 50 Marks).

  Eight questions will be asked, students should write Five questions.

  Each unit Four questions can be asked. Each question may have subdivisions. Maximum two subdivisions shall be permitted.
- **CA 3:** All the exercises/experiments should be completed and kept for the practical test. The students shall be permitted to select any one experiment by lot for the test. The

practical test should be conducted as per the scheme of evaluation as below. The marks awarded for 100 marks will be converted to 15 Marks for the internal mark.

Practical documents should be maintained for every exercise / experiment immediately after completion of the practice. The practical document should be submitted for the practical test. Each exercise/experiment should be evaluated for 10 Marks. The total marks awarded should be converted to 30 Marks for the practical test as per the scheme of evaluation as below.

The details of the practical documents to be prepared as per the instruction below.

Each exercise the procedure and steps should be completed on the day of practice.

The same shall be evaluated for 10 marks on the day or next day of practice before commencement of the next exercise.

This documentation can be carried out in a separate notebook or a printed manual or a file with documents. The reading and calculations and graph should be written by the student manually in the documents.

The evaluated practical document should be submitted for the Practical Test (CA3). The mark scored by the students should be converted to 30 marks. The same should be included as per the allocation in the practical test.

The detailed date of the practices and its evaluations should be maintained in the course logbook. The log book and the practical documents should be submitted for the verification by the Flying Squad and DOTE Official.

SCHEME OF EVALUATION - Practical Test

Sl.No.	Description	Marks
A	Aim / Description	10
B	Procedure / Tools used / Implementation	20
C	Presentation / Report	30
D	Practical document (All Practicals)	30
E	Viva Voce	10
	Total	100

1020235332	Composite Materials	L	T	P	C
PRACTICUM		2	0	2	3

CA4: Model examination should be conducted for complete theory portions as per the end semester question pattern. The marks awarded should be converted to 15 marks for the internal assessment.

Question Pattern:

Answer Ten questions by selecting two questions from each unit. Each question carries 10 marks each.

Four questions will be asked from every unit, students should write any two questions. The question may have two subdivisions only.

Syllabus Contents.

UNIT - I	**INTRODUCTION TO COMPOSITES**	
Fundamentals of composites-matrix and reinforcements Matrix- Types of Matrix-Polymer matrix composites(PMC)-Metal Matrix Composites(MMC)-Ceramics Matrix Composites- Concepts and different application Reinforcements-Basic requirements of selection of Reinforcements-Types of Reinforcements-Whiskers-Glass Fiber-Carbon fibers-Aramid fibers-Ceramic fibers-properties and applications.		6
UNIT-II	**MANUFACTURING OF POLYMER MATRIX COMPOSITES**	
Types of PPC manufacturing methods- Hand layup- Spray Layup-Compression Moulding-Sheet forming-Pultrusions-hot press and Autoclave-Filament Winding-Basic principles, construction and application of PPC.		6

1020235332	Composite Materials	L	T	P	C
PRACTICUM		2	0	2	3

UNIT-III	MANUFACTURING OF METAL MATRIX COMPOSITES (MMC) AND CERAMICS MATRIX COMPOSITES (CMC)	
MMC manufacturing methods- Casting methods- Gravity and low pressure die-squeeze –spray forming-thixo-moulding- basic principles construction and applications CMC manufacturing Methods-Reaction Sintering-Electro Deposition-Spray forming-infiltration- basic principles construction and applications		6
UNIT-IV	**RECENT DEVELOPMENT IN COMPOSITE MANUFACTURING**	
Advanced composites-self healing composites-micro and nano-composites-biodegradable composites-left handed composites-stiffer than stiff composites-carbon and carbon composites- process, applications and limitations.		6
UNIT-V	**SELECTION OF COMPOSITES AND MECHANICAL TESTING**	
Selection of composites for industrial applications- -design and process selection for new applications- Daily usage-automobile sectors- aerospace - Product examples and applications. Mechanical testing of Composites-Tensile testing-fatigue testing (three-point bend test)-Toughness mechanism-basic testing procedure, equipment used and test applications.		6
Practical exercise		20
Exercise 1: Material Properties Comparison. **Exercise 2:** Composite Material Selection. **Exercise 3:** Hand Lay-Up Process. **Exercise 4:** Mechanical Testing - Test and analyze the mechanical properties of composite materials. **Exercise 5:** Finite Element Analysis (FEA) **Exercise 6:** Micromechanics Analysis - Explore the microscale interactions within composite materials.		
	ASSESSMENT TEST AND REVISION	10
	TOTAL	60

1020235332	**Composite Materials**	L	T	P	C
PRACTICUM		2	0	2	3

Suggested List of Students Activity

1. Visit the composite laboratory.
2. Identify the composite materials used in the Automobile industries.

Reference

1. Suresh, S., Martensen, A., and Needleman, A., "Fundamentals of Metal MatrixComposites", Butterworth, Heinemann, 2013.ISBN: 0080523714, 9780080523712.
2. Strong, A. Brent, "Fundamentals of Composites Manufacturing : Materials, Methods and Applications", First Edition, Society of Manufacturing Engineers, 2008, ISBN 13: 9780872638549.
3. Ru-Min Wang,Shui-Rong Zheng,Ya-Ping Zheng,"Polymer Matrix Composites and Tchnology", First Edition, Woodhead publisher, 2011, ISBN:978-0-85709-221-2.

ONLINE WEB REFERENCES

- https://archive.nptel.ac.in/courses/112/104/112104229/
- https://nptel.ac.in/courses/112104168
- https://archive.nptel.ac.in/courses/101/104/101104010/

List of Equipments Required

Computer - 10 Nos.

Kit and setup required for the Composite Lay up.

Software required for the FEA.

1020235332	**Composite Materials**	L	T	P	C
PRACTICUM		2	0	2	3

END SEMESTER EXAMINATION QUESTION PATTERN – Theory Exam

Duration: 3 Hrs. Max. Marks: 100

Note: Answer Ten questions by selecting two questions from each unit. Each question carries 10 marks each.

Instruction to the Question Setters

Four questions will be asked from every unit, students should write any two questions for 10 marks. The question may have two subdivisions only.

1020235333	**Refrigeration and Air Conditioning**	L	T	P	C
PRACTICUM		2	0	2	3

Introduction

Industrial refrigeration and air conditioning play a crucial role in various sectors, ensuring the preservation of perishable goods, maintaining comfortable and safe environments, and supporting industrial processes that require specific temperature and humidity conditions. These systems are integral to the efficient operation of many industries, from food and beverage to pharmaceuticals, chemicals, and manufacturing.

Course Objectives

- To understand the basics of Refrigeration cycles.
- To understand basics of vapour compression and vapour absorption systems.
- To identify components and refrigerants and lubricants of a refrigeration system.
- To understand control strategies for refrigeration systems.
- To understand the basics about air conditioning systems.

Course Outcomes

At the end of the course, the student will be able to:

CO1 Explain the refrigeration and types of Refrigeration cycles

CO2 Describe Vapour Compression and Vapour Absorption System

CO3 Identify the equipments required for the refrigeration system.

CO4 Identify the components for a refrigeration system.

CO5 Explain the working principles of Air-conditioning.

Pre-requisites

Knowledge on Heat, Thermodynamics

1020235333	Refrigeration and Air Conditioning	L	T	P	C
PRACTICUM		2	0	2	3

CO/PO Mapping

CO / PO	PO1	PO2	PO3	PO4	PO5	PO6	PO7
CO1	3						
CO2	3				1		
CO3	3				1		
CO4	3						
CO5	3						

Legend: 3-High Correlation, 2-Medium Correlation, 1-Low Correlation

Instructional Strategy

Active Learning: Activities for active learning can include think-pair-share strategies as well as kin-esthetic learning environment.Teachers can start a discussion to make sure students take ownership over their own participation and talk through new ideas and skills with peers. Teachers guide students as they construct their own knowledge and understanding.

Hands-on-Training: Conduct demonstrations and hands on training is all about applying the knowledge you have learned in training into practice.

Real time Learning: Instructors encourage the students to implement the techniques in their own place / Lab through the Industry-Institute interactions.

1020235333	**Refrigeration and Air Conditioning**	L	T	P	C
PRACTICUM		2	0	2	3

Assessment Methodology:

	Continuous Assessment (40 marks)				End Semester Examination (60 marks)
	CA1	CA2	CA3	CA4	
Mode	Written Test Theory (Any Two Units)	Written Test Theory (Another Two Units)	Practical Test (All Exercises)	Written Test (Complete Theory Portions)	Written Examination (Complete Theory Portions)
Duration	2 Periods	2 Periods	3 Hours	3 Hours	3 Hours
Exam Marks	50	50	100	100	100
Converted to	10	10	15	15	60
Marks	10		15	15	60
Tentative Schedule	6th Week	12th Week	15th Week	16th Week	

Note:

- **CA1 and CA2:** Assessment written test should be conducted for 50 Marks. The marks scored will be converted to 10 Marks for each test. Best of one will be considered for the internal assessment of 10 Marks.

  CA1 and CA2, Assessment written test should be conducted for two units as below.

  Answer any Five questions. (5 X 10 Marks = 50 Marks).

  Eight questions will be asked, students should write Five questions.

  Each unit Four questions can be asked. Each question may have subdivisions. Maximum two subdivisions shall be permitted.
- **CA 3:** All the exercises/experiments should be completed and kept for the practical test. The students shall be permitted to select any one experiment by lot for the test. The

practical test should be conducted as per the scheme of evaluation as below. The marks awarded for 100 marks will be converted to 15 Marks for the internal mark.

Practical documents should be maintained for every exercise / experiment immediately after completion of the practice. The practical document should be submitted for the practical test. Each exercise/experiment should be evaluated for 10 Marks. The total marks awarded should be converted to 30 Marks for the practical test as per the scheme of evaluation as below.

The details of the practical documents to be prepared as per the instruction below.

Each exercise should be completed on the day of practice. The same shall be evaluated for 10 marks on the day or next day of practice before commencement of the next exercise.

This documentation can be written in a separate notebook or a printed manual or a file with documents. The reading and calculations and graph/ should be written by the student manually in the documents.

The evaluated practical document should be submitted for the Practical Test (CA3). The mark scored by the students should be converted to 30 marks. The same should be included as per the allocation in the practical test.

The detailed date of the practices and its evaluations should be maintained in the course logbook. The log book and the practical documents should be submitted for the verification by the Flying Squad and DOTE Official.

SCHEME OF EVALUATION - Practical Test

Sl.No.	Description	Marks
A	Aim / Description	10
B	Procedure / Formulae used / Adjustment	20
C	Calculation / Report	20
D	Result	10
E	Practical document (All Practicals)	30
F	Viva Voce	10
	Total	100

1020235333	Refrigeration and Air Conditioning	L	T	P	C
PRACTICUM		2	0	2	3

CA4: Model examination should be conducted for complete theory portions as per the end semester question pattern. The marks awarded should be converted to 15 marks for the internal assessment.

Question Pattern:

Answer Ten questions by selecting two questions from each unit. Each question carries 10 marks each.

Four questions will be asked from every unit, students should write any two questions. The question may have two subdivisions only.

Syllabus Contents.

UNIT - I	**Introduction to Refrigeration**	
Definition of Refrigeration; Refrigerating effect-unit of refrigeration- Coefficient of performance; Types of Refrigeration-Ice, dry ice, Steam jet, Throttling, Liquid nitrogen refrigeration; Carnot refrigeration Cycle; Air refrigeration- Bell - Coleman cycle, PV& TS diagram; Advantage and disadvantages in air refrigeration; Simple problems		7
Unit - II	**Refrigeration systems**	
Basic Components, Flow diagram of working of Vapour compression cycle; Representation of the vapour compression cycle on P-H, T-S & P-V Diagram; Expression for Refrigerating effect, work done and power required; Types of Vapour Compression cycle; Effects of superheating and undercooling, its advantages and disadvantages; Simple Vapour absorption cycle and its flow diagram; Simple Electrolux system for domestic units; Comparison of Vapour absorption and vapour compression system; Simple problems on vapour compression cycle.		7

1020235333	**Refrigeration and Air Conditioning**	L	T	P	C
PRACTICUM		2	0	2	3

Unit - III	**Refrigeration equipments**	
Compressor - types of compressors; Hermetically sealed and Semi hermetically sealed compressor; Condensers - Air Cooled, water cooled, natural and forced draught cooling system; Advantages and disadvantages of air cooled and water cooled condensers; Evaporators -natural, convection, forced convection types. Refrigerants and lubricants: Introduction to refrigerants; Properties of good refrigerants; Classification of refrigerants by group number and commonly used refrigerants in practice; Detection of refrigerants leakage; Charging the system with refrigerant; Lubricants used in refrigeration and their properties.		7
Unit - IV	**Refrigerant flow controls**	
Capillary tube; Automatic Expansion valve; Thermostatic expansion valve; High side and low side float valve; Solenoid valve; Evaporator pressure regulator. Application of refrigeration: Slow and quick freezing; Cold storage and Frozen storage; Dairy refrigeration; Ice making industry; Water coolers.		7
Unit - V	**Air conditioning**	
Introduction to Air conditioning; Factors affecting Air conditioning; Psychrometry - Psychrometric chart and its use; Psychometric process - sensible heating and cooling, Humidifying and dehumidifying; Adiabatic saturation process; Equipments used in air conditioning cycle; Air conditioning units and plants. Refrigeration and Air-conditioning tools: Tools used in refrigeration and Air conditioner installation; Installation procedure; Faults in refrigeration and air conditioning system; Servicing procedure.		7
PRACTICAL EXERCISE		20
1. Conduct a test on the cooling tower and determine its efficiency. 2. Determine the cooling capacity and cop of the given vapour compression refrigeration system 3. Setting and adjustment of the refrigeration components i) H.P & L.P cut out		

ii) Thermostatic expansion valve (3 turn adjustment of superheat) iii) Automatic expansion valve 4. Conduct a performance test on a vapour compression refrigeration system using capillary tube/automatic expansion valve/thermostatic expansion valve and compare the result 5. Conduct a performance test on a given open type air-conditioning system and determine the cooling capacity and its c.o.p. 6. Set the winter comfort condition in the desired space using a recirculation type air-conditioning system and also determine its cooling capacity. 7. Set the summer comfort condition in the desired space using a recirculation type air-conditioning system and also determine its cooling capacity.	
ASSESSMENT TEST AND REVISION	10
TOTAL	60

Reference

1. Refrigeration and Air Conditioning – Sadhu Singh, Khanna Book Publishing Co., New Delhi
2. Refrigeration and Air Conditioning – S. Domkundwar, Dhanpat Rai publications.
3. Refrigeration and Air Conditioning – A.S.Sarao & G.S. Gabi, 6th edition, Satya Prakashan publications, New Delhi, 2004.
4. Principles of Refrigeration – Roy J.Dossat, 5th edition, Pearson Publications, 2001.
5. Refrigeration and Air Conditioning – M.Zakria Baig, Premier/ Radiant Publishing House.
6. Refrigeration and Air Conditioning – C.P Arora, Tata McGraw Hill Education, 2000.

1020235333	Refrigeration and Air Conditioning	L	T	P	C
PRACTICUM		2	0	2	3

Equipment required.

1. Cooling tower Kit.
2. Vapour compression refrigeration system Kit.
3. Open type air-conditioning system Kit.
4. Recirculation type air-conditioning system Kit.
5. Required measuring instruments and consumables.

END SEMESTER EXAMINATION QUESTION PATTERN – Theory Exam

Duration: 3 Hrs. **Max. Marks: 100**

Note: Answer Ten questions by selecting two questions from each unit. Each question carries 10 marks each.

Instruction to the Question Setters

Four questions will be asked from every unit, students should write any two questions for 10 marks. The question may have two subdivisions only.

1020235334	**Value Engineering**	L	T	P	C
PRACTICUM		2	0	2	3

Introduction

Value engineering is a systematic, organized approach to providing necessary functions in a project at the lowest cost. Value engineering promotes the substitution of materials and methods with less expensive alternatives, without sacrificing functionality. It is focused solely on the functions of various components and materials, rather than their physical attributes.

Course Objectives

The objective of this course is to enable the student

1. To learn the value engineering methodology.
2. To learn how to manage value in projects.
3. To obtain industry-related experience in applying value engineering methods.

Course Outcome

After successful completion of this course, the students can able to

CO1: Explain the concepts, techniques and applications of value engineering

CO2: Describe job plan of value engineering.

CO3: Illustrate different value engineering techniques and versatility of value engineering.

CO4: Explain the efforts of value engineering team during the process of value engineering

CO5: Select suitable recent design tools and operating methods.

Prerequisites

Element of Machine Design, Re engineering, CAD/CAM, Quality Management.

1020235334	**Value Engineering**	L	T	P	C
PRACTICUM		2	0	2	3

CO-PO Mapping

CO/PO	PO1	PO2	PO3	PO4	PO5	PO6	PO7
CO1	3		1	-	1		
CO2	3		1	1	1		
CO3	3		1	1	1		
CO4	3		1	1	1		
CO5	3		1		1		

Legend: 3-High Correlation, 2-Medium Correlation, 1-Low Correlation

Assessment Methodology:

	Continuous Assessment (40 marks)				End Semester Examination (60 marks)
	CA1	CA2	CA3	CA4	
Mode	Written Test Theory (Any Two Units)	Written Test Theory (Another Two Units)	Practical Test (All Exercises)	Written Test (Complete Theory Portions)	Written Examination (Complete Theory Portions)
Duration	2 Periods	2 Periods	3 Hours	3 Hours	3 Hours
Exam Marks	50	50	100	100	100
Converted to	10	10	15	15	60
Marks	10		15	15	60
Tentative Schedule	6th Week	12th Week	15th Week	16th Week	

1020235334	**Value Engineering**	L	T	P	C
PRACTICUM		2	0	2	3

Note:

- **CA1 and CA2:** Assessment written test should be conducted for 50 Marks. The marks scored will be converted to 10 Marks for each test. Best of one will be considered for the internal assessment of 10 Marks.

  CA1 and CA2, Assessment written test should be conducted for two units as below.

  Answer any Five questions. (5 X 10 Marks = 50 Marks).

  Eight questions will be asked, students should write Five questions.

  Each unit Four questions can be asked. Each question may have subdivisions. Maximum two subdivisions shall be permitted.

- **CA 3:** All the exercises/experiments should be completed and kept for the practical test. The students shall be permitted to select any one experiment by lot for the test. The practical test should be conducted as per the scheme of evaluation as below. The marks awarded for 100 marks will be converted to 15 Marks for the internal mark.

  Practical documents should be maintained for every exercise / experiment immediately after completion of the practice. The practical document should be submitted for the practical test. Each exercise/experiment should be evaluated for 10 Marks. The total marks awarded should be converted to 30 Marks for the practical test as per the scheme of evaluation as below.

  The details of the practical documents to be prepared as per the instruction below.

  Each exercise should be completed on the day of practice. The same shall be evaluated for 10 marks on the day or next day of practice before commencement of the next exercise.

  This documentation can be written in a separate notebook / printed manual / file. The reading and calculations and graph/ should be written by the student manually. The evaluated practical document should be submitted for the Practical Test (CA3). The mark scored by the students should be converted to 30 marks. The same should be included as per the allocation in the practical test.

1020235334	**Value Engineering**	L	T	P	C
PRACTICUM		2	0	2	3

The detailed date of the practices and its evaluations should be maintained in the course logbook. The log book and the practical documents should be submitted for the verification by the Flying Squad and DOTE Official.

SCHEME OF EVALUATION - Practical Test

Sl.No.	Description	Marks
A	Aim / Description	10
B	Procedure	20
C	Presentation / Report	20
D	Result	10
E	Practical document (All Practicals)	30
F	Viva Voce	10
	Total	100

CA4: Model examination should be conducted for complete theory portions as per the end semester question pattern. The marks awarded should be converted to 15 marks for the internal assessment.

Question Pattern:

Answer Ten questions by selecting two questions from each unit. Each question carries 10 marks each.

Four questions will be asked from every unit, students should write any two questions. The question may have two subdivisions only.

1020235334	**Value Engineering**	L	T	P	C
PRACTICUM		2	0	2	3

Syllabus Contents

THEORY		
Unit I	**INTRODUCTION OF VALUE ENGINEERING**	
Value engineering (VE), concepts, advantages, applications, problem recognition, and role in productivity, criteria for comparison, element of choice. Organization: Level of value engineering in the organization, size and skill of VE staff, small plant, VE activity, unique and quantitative evaluation of ideas.		6
Unit II	**VALUE ENGINEERING JOB PLAN**	
Introduction, orientation, information phase, speculation phase, analysis phase. Selection and Evaluation of value engineering Projects, Project selection, methods selection, value standards, application of value engineering methodology		6
Unit III	**VALUE ENGINEERING TECHNIQUES**	
Selecting products and operation for value engineering action, value engineering programme, determining and evaluating function(s) assigning rupee equivalents, developing alternate means to required functions, Decision making for optimum alternative, use of decision matrix, queuing theory and Monte Carlo method make or buy, measuring profits, reporting results, Follow up, Use of advanced technique like Function Analysis System.		6
Unit IV	**VERSATILITY OF VALUE ENGINEERING**	
Value engineering operation in maintenance and repair activities, value engineering in non-hardware projects. Initiating a value engineering programme: Introduction, training plan, career development for value engineering specialties.		6
Unit V	**VALUE ENGINEERING LEVEL OF EFFORT**	
Value engineering team, co-coordinator, designer, different services, definitions, construction management contracts, value engineering three case studies.		6

1020235334	**Value Engineering**	L	T	P	C
PRACTICUM		2	0	2	3

Practical Exercises: Value engineering in mechanical engineering aims to optimize the value of products or processes by improving their functionality, quality, and cost-effectiveness. Here are some practical exercises tailored for value engineering mechanical engineering:	20
Exercise 1: Product Analysis and Cost Breakdown: Exercise: Select a mechanical product or component (e.g., gearbox, pump, conveyor system) and conduct a detailed analysis of its design, materials, manufacturing processes, and associated costs. Task students with identifying opportunities for cost reduction while maintaining or improving product performance and reliability. Encourage students to create cost breakdowns and conduct comparative analyses with alternative materials, manufacturing methods, or design modifications.	
Exercise 2: Function Analysis and Functional Decomposition: Exercise: Choose a mechanical system or assembly and perform a functional analysis to identify its primary functions, sub-functions, and interrelationships. Instruct students to decompose the system into its constituent functions and evaluate each function's importance in meeting user requirements. Task students with brainstorming alternative design solutions or modifications that optimize functionality and eliminate unnecessary features or costs.	
Exercise 3: Value Stream Mapping (VSM): Exercise: Provide students with a manufacturing process map or workflow diagram for a mechanical component or assembly. Guide students through the process of creating a value stream map to visualize material and information flow, process cycle times, and areas of waste or inefficiency. Encourage students to identify opportunities for streamlining processes, reducing lead times, and eliminating non-value-added activities to enhance overall value.	
Exercise 4: Design for Manufacturability (DFM) Analysis: Exercise: Assign students a mechanical part or assembly and instruct them to perform a Design for Manufacturability (DFM) analysis.	

1020235334	**Value Engineering**	L	T	P	C
PRACTICUM		2	0	2	3

Have students evaluate the design for factors such as ease of manufacturing, assembly, and serviceability, as well as opportunities for standardization and part consolidation. Task students with proposing design modifications or optimizations that simplify manufacturing processes, reduce material waste, and lower production costs.	
Exercise 5: Cost-Benefit Analysis and Trade-off Studies: Exercise: Present students with a design scenario involving conflicting objectives, such as reducing product cost versus improving performance. Guide students through conducting a cost-benefit analysis to quantify the financial impact of different design alternatives. Encourage students to perform trade-off studies to assess the trade-offs between cost, performance, quality, and other key factors, ultimately identifying the most cost-effective solution.	
Exercise 6: Supplier and Material Selection Optimization: Exercise: Provide students with a list of potential suppliers and materials for a mechanical component or system. Instruct students to evaluate supplier capabilities, material properties, lead times, and costs to identify the most suitable options. Task students with negotiating with suppliers, exploring bulk purchasing discounts, and optimizing material selection to minimize procurement costs while ensuring quality and reliability.	
Exercise 7: Life Cycle Cost Analysis (LCCA): Exercise: Assign students a mechanical product or system and instruct them to perform a Lifecycle Cost Analysis (LCCA) considering all costs incurred throughout its lifecycle, including acquisition, operation, maintenance, and disposal. Guide students through quantifying and comparing the total cost of ownership for different design alternatives, highlighting opportunities for long-term cost savings and value optimization.	
Test + Revision	10
Total	60

1020235334	**Value Engineering**	L	T	P	C
PRACTICUM		2	0	2	3

Suggested list of Students Activity

1. Check the web portal to study the material to identify the role and requirement of Value Engineering.
2. Periodical quizzes should be conducted on a weekly/fortnightly basic to reinforce the use of Value Engineering.
3. Students might be asked to visit the mechanical heavy vehicle component manufacturing industry to find the value engineering implementation.

Reference Books

1. Richard Park, “Value Engineering: A Plan for Invention”, St. Lucie Press, 1999.
2. Del L. Younker, “Value Engineering analysis and methodology”, Marcel Dekker Inc, New York, 2004.
3. Anil Kumar Mukhopadhyaya, “Value Engineering Mastermind: From concept toValue Engineering Certification”, SAGE Publications, 2003
4. Anil Kumar Mukhopadhyaya, “Value Engineering: Concepts Techniques and applications”, SAGE Publications 2010

END SEMESTER EXAMINATION QUESTION PATTERN – Theory Exam

Duration: 3 Hrs. **Max. Marks: 100**

Note: Answer Ten questions by selecting two questions from each unit. Each question carries 10 marks each.

Instruction to the Question Setters

Four questions will be asked from every unit, students should write any two questions for 10 marks. The question may have two subdivisions only.

1020235335	**Green Manufacturing**	L	T	P	C
PRACTICUM		2	0	2	3

Introduction

This course explores present manufacturing practices that produce products without much pollution. Green manufacturing refers to the regeneration of production methods and the establishment of ecologically sustainable businesses in the manufacturing industry. In simple terms, it is the "greening" of manufacturing, whereby employees recycle and reuse materials, cut down on waste and pollution, use less natural resources, and decrease emissions during production.

Course Objectives

The objective of this course is to prepare the student.

- To introduce the concept of green manufacturing
- To impart knowledge of pollution and measurement of carbon emissions.
- To become familiar with the recent developments in life cycle management.
- To acquire knowledge of selecting suitable materials, methods, and recycling to make green manufacturing

Course Outcomes

On successful completion of this course, the student will be able to,

CO1: Explain the importance of tools and Techniques used in green manufacturing

CO2: Familiarize the causes of industrial air pollutants and methods to measure them in different environments.

CO3: Explain the causes and effects of sound and water pollution.

CO4: Describe the recent developments in life cycle assessment and its implementation.

CO5: Apply the concept of green manufacturing designs to suitable for an environment

Pre-requisites

Knowledge of basic chemistry and metrology.

1020235335	**Green Manufacturing**	L	T	P	C
PRACTICUM		2	0	2	3

CO/PO Mapping

CO / PO	PO1	PO2	PO3	PO4	PO5	PO6	PO7
CO1	3				1	-	1
CO2	3				1	-	1
CO3	3				1	-	1
CO4	3				1	-	1
CO5	3				1	-	1

Legend: 3-High Correlation, 2-Medium Correlation, 1-Low Correlation

Instructional Strategy

- It is advised that teachers take steps to pique pupils' attention and boost their curiosity to learn.
- Implement task-based learning activities where students work on specific tasks or projects.
- Incorporate technology tools and resources, such as online platforms, interactive multimedia, and virtual communication tools, to enhance engagement and provide additional practice opportunities.
- Incorporate formative and summative assessments to gauge student progress and provide targeted feedback.
- Throughout the course, a theory-demonstrate-practice-activity strategy may be used to ensure that learning is outcome and employability based.
- All demonstrations/Hand-on practices may be followed in the real environment as far as possible.

1020235335	**Green Manufacturing**	L	T	P	C
PRACTICUM		2	0	2	3

Assessment Methodology:

	Continuous Assessment (40 marks)				End Semester Examination (60 marks)
	CA1	CA2	CA3	CA4	
Mode	Written Test Theory (Any Two Units)	Written Test Theory (Another Two Units)	Practical Test (All Exercises)	Written Test (Complete Theory Portions)	Written Examination (Complete Theory Portions)
Duration	2 Periods	2 Periods	3 Hours	3 Hours	3 Hours
Exam Marks	50	50	100	100	100
Converted to	10	10	15	15	60
Marks	10		15	15	60
Tentative Schedule	6th Week	12th Week	15th Week	16th Week	

Note:

- **CA1 and CA2:** Assessment written test should be conducted for 50 Marks. The marks scored will be converted to 10 Marks for each test. Best of one will be considered for the internal assessment of 10 Marks.

  CA1 and CA2, Assessment written test should be conducted for two units as below.

  Answer any Five questions. (5 X 10 Marks = 50 Marks).

  Eight questions will be asked; students should write Five questions.

  Each unit Four questions can be asked. Each question may have subdivisions. Maximum two subdivisions shall be permitted.

1020235335	**Green Manufacturing**	L	T	P	C
PRACTICUM		2	0	2	3

- **CA 3:** All the exercises/experiments should be completed and kept for the practical test. The students shall be permitted to select any one experiment by lot for the test. The practical test should be conducted as per the scheme of evaluation as below. The marks awarded for 100 marks will be converted to 15 Marks for the internal mark.

  Practical documents should be maintained for every exercise / experiment immediately after completion of the practice. The practical document should be submitted for the practical test. Each exercise/experiment should be evaluated for 10 Marks. The total marks awarded should be converted to 30 Marks for the practical test as per the scheme of evaluation as below.

  The details of the practical documents to be prepared as per the instruction below. Each exercise should be completed on the day of practice. The same shall be evaluated for 10 marks on the day or next day of practice before commencement of the next exercise.

  This documentation can be written in a separate notebook or a printed manual or a file with documents. The reading and calculations and graph/ should be written by the student manually in the documents. The evaluated practical document should be submitted for the Practical Test (CA3). The mark scored by the students should be converted to 30 marks. The same should be included as per the allocation in the practical test.

  The detailed date of the practices and its evaluations should be maintained in the course logbook. The log book and the practical documents should be submitted for the verification by the Flying Squad and DOTE Official.

1020235335	Green Manufacturing	L	T	P	C
PRACTICUM		2	0	2	3

SCHEME OF EVALUATION - Practical Test

Sl.No.	Description	Marks
A	Aim / Description	10
B	Procedure	20
C	Presentation / Report	30
D	Practical document (All Practicals)	30
E	Viva Voce	10
	Total	100

CA4: Model examination should be conducted for complete theory portions as per the end semester question pattern. The marks awarded should be converted to 15 marks for the internal assessment.

Question Pattern:

Answer Ten questions by selecting two questions from each unit. Each question carries 10 marks each.

Four questions will be asked from every unit, students should write any two questions. The question may have two subdivisions only.

Syllabus Contents.

UNIT-I	**INTRODUCTION TO GREEN MANUFACTURING**	
THEORY: Green Manufacturing-Definition-History and evolution of green manufacturing. Factors affecting GM- Environmental Impact of Manufacturing, Strategies for Green Manufacturing. Tools & techniques required -Environmental Conscious, Design for Environment; Design for recycling, Eco friendly Product design methods- Environmental Impact assessment methods and Standards.		6

1020235335	**Green Manufacturing**	L	T	P	C
PRACTICUM		2	0	2	3

PRACTICAL: **Exercise 1:** Prepare a case study about implementation of green manufacturing. (The students will have to identify smaller problems from industries / research / academic organizations pertaining to green manufacturing, analyze and offer solutions to the problems identified based on the knowledge acquired)	3
UNIT-II **INDUSTRIAL AIR POLLUTANTS**	
THEORY: Pollutants-Primary and Secondary Pollutants, Automobile Pollutants, Industrial Pollution, Ambient air quality Standards, Metrological aspects of air Pollution, Temperature lapse Rates and Stability- wind velocity and Turbulence-Pump behavior dispersion of air Pollutants. Measurement of air Pollution-Air pollution sampling-collection of gaseous air pollutants-collection of particulate pollutants-stock sampling, analysis of air pollutants-sulfur dioxide-nitrogen dioxide, carbon monoxide, oxidants and ozone.	6
PRACTICAL: **Exercise 2:** Determination of CO and CO2 and unburned hydrocarbons concentration in IC Engine Exhaust.	2
UNIT-III **NOISE & WATER POLLUTION IN INDUSTRIES8**	
THEORY: Noise pollution in Industries- Frequency and Sound Levels- Effect of human, Environment and properties, Natural and Androgenic Noise Sources-Measuring Instruments for frequency and Noise levels- Masking of sound. Water Pollution-Major pollutants of Water- Contaminants in water, Nitrates, Fluorides, Detergents, taste and odour, Radioactivity in water- Criteria, for different impurities in water- Water Quality requirement for industry Uses-Measurement of water pollution.	6

1020235335	**Green Manufacturing**	L	T	P	C
PRACTICUM		2	0	2	3

PRACTICAL: **Exercise 3:** To estimate Total Dissolved Solids (DO)and PH value of water supplied to the heat exchanger of any machine. **Exercise 4:** Determination of hardness (temporary, permanent and total) of domestic and industrial waters. **Exercise 5:** Experiment on Industrial noise measurement in any production laboratory. **Exercise 6:** Free and forced vibration measurement on simple cantilever beams / Machine members.	8
UNIT-IV **LIFE CYCLE ASSESSMENT**	
THEORY: Life cycle assessment - Principles of Life cycle assessment; Product Life Cycle Assessment -Triple bottom line approach; Industrial Ecology- Ecological footprinting - Future role of LCA - measurement techniques and reporting. Clean Energy Supply - Green Manufacturing through Clean Energy Supply - Clean Energy Technologies, Application - Potential of Clean Energy. Characteristics of Green manufacturing processes - Energy efficiency analysis of green manufacturing processes - Sustainability analysis and Scope of green manufacturing centers.	6
PRACTICAL: **Exercise 7:** Estimate the Energy requirement of any production machines. **Exercise 8:** Machining under different cooling strategy and estimate the Coolant life management.	4

1020235335	**Green Manufacturing**	L	T	P	C
PRACTICUM		2	0	2	3

UNIT-V	**ENVIRONMENTAL EFFECT OF GREEN MANUFACTURING DESIGN**
THEORY: Green Manufacturing Assessment -Concept Models and Various Approaches, Product Sustainability and Risk/Benefit assessment; Corporate Social Responsibility. Environmental effects of design -Selection of natural friendly material - Eco design - Environmental Damage- Material flow and cycles – Material recycling – Emission less manufacturing- Reduction of toxic emission – design for recycle.	6
PRACTICAL: **Exercise 9:** Estimate the power consumption of spindle and feed drive units power measurement in center lathe / CNC turning or milling machine. (Consider a typical component and record the power using power sensor under different operation conditions and evaluate the energy consumption and efficiency of the process)	3
Test + Revision	10
Total	60

Suggested List of Students Activity

- The students will have to identify a larger problem from industries/research/academic organizations pertaining to green manufacturing, analyze it, and offer solutions to the problems identified based on the knowledge acquired.
- The students have to create a graphical diagram that shows the environmental challenges in the manufacturing shop or laboratory tool room. Suggest the remedial measure.
- Students must keep track of the percentage of air pollutants in the classroom. Create a comparison chart for a month.

Reference

- Gradel.T.E. and B.R. Allenby – Industrial Ecology – Prentice Hall – 2010
- World Commission on Environment and Development (WCED), Our Common Future, Oxford University Press 2005.

1020235335	**Green Manufacturing**	L	T	P	C
PRACTICUM		2	0	2	3

- Rao M.N. and Dutta A.K. “Wastewater treatment”, Oxford & IBH publishing Co. Pvt. Ltd., New Delhi, Second Edition, 2006
- Rao CS Environmental Pollution Control Engineering-, Wiley Eastern Ltd., New Delhi, 2006.
- Canter, R.L., “Environmental Impact Assessment”, McGraw Hill Inc., New Delhi, 1996.
- Shukla, S.K. And Srivastava, P.R., “Concepts In Environmental Impact Analysis”, Common Wealth Publishers, New Delhi, 1992.

Web-based/Online Resources

- https://www.epa.gov/green-engineering/about-green-engineering
- https://ceat.okstate.edu/che/site_files/docs/david-t-allen.pdf
- Green engineering principles and applications, DOI:10.13140/RG.2.2.19639.65449
- https://www.vssut.ac.in/lecture_notes/lecture1424353637.pdf
- https://joycelau99.wordpress.com/wp-content/uploads/2020/10/introduction-to-environmental-engineering.pdf
- https://nptel.ac.in/courses/112104225
- https://archive.nptel.ac.in/courses/110/104/110104119
- https://www.youtube.com/watch?v=CsqEClHQBCI&list=PLx3rZEiwFTIO_2_STJGSsq9Mya7kjQVCy
- https://www.youtube.com/watch?v=Ri9rcXxcKdA

1020235335	**Green Manufacturing**	L	T	P	C
PRACTICUM		2	0	2	3

Instruments/Facilities required to conduct the practical sessions

Sl.No	Equipment/ Instruments required	Quantity Required
1	Sound level Meter(SLM)/ Integrating Sound Level Meter(ISLM)	01
2	CO_2 Meter	01
3	CO Meter	01
4	pH meter	01
5	TDS meter	01
6	Energy meter	01
7	Vibration meter	01
8	Water hardness test kit	01
9	Other metrology instruments(Vernier calliper, thermometer etc)	As reqd

END SEMESTER EXAMINATION QUESTION PATTERN – Theory Exam

Duration: 3 Hrs. **Max. Marks: 100**

Note: Answer Ten questions by selecting two questions from each unit. Each question carries 10 marks each.

Instruction to the Question Setters

Four questions will be asked from every unit, students should write any two questions for 10 marks. The question may have two subdivisions only.

1020235336	**Lean Manufacturing**	L	T	P	C
PRACTICUM		2	0	2	3

Introduction

Lean Manufacturing is a systematic approach to minimizing waste within a manufacturing system while simultaneously maximizing productivity. Originating from the Toyota Production System (TPS), lean manufacturing principles focus on creating more value for customers with fewer resources.

At its core, lean manufacturing aims to streamline production processes, reduce costs, and improve quality by eliminating non-value-added activities. This is achieved through various techniques and tools that emphasize continuous improvement, such as 5S (Sort, Set in order, Shine, Standardize, Sustain), Kaizen (continuous improvement), Value Stream Mapping, and Just-In-Time (JIT) production.

For diploma engineering students, learning about lean manufacturing provides essential skills and knowledge to optimize production processes, enhance operational efficiency, and contribute to the overall competitiveness of a manufacturing enterprise. By understanding and applying lean principles, students can play a pivotal role in transforming traditional manufacturing setups into more agile, responsive, and waste-free operations.

Course Objectives

It is desired that at the end of the course, the student will be equipped with the basic knowledge of lean manufacturing, tools, techniques and implementation outcomes.

Course Outcomes

On successful completion of this course, the student will be able to,

CO1: Explain the importance of tools used in lean manufacturing.

CO2: Explain the importance of tools and technique of TQM.

CO3: Understand the objective and functions of TPM.

CO4: Describe the Design of Experiments, Designing for Quality, and Quality in Service Sectors.

CO5: Apply the concept of six sigma and quality circle.

1020235336	**Lean Manufacturing**	L	T	P	C
PRACTICUM		2	0	2	3

CO/PO Mapping

CO / PO	PO1	PO2	PO3	PO4	PO5	PO6	PO7
CO1	3				1	-	1
CO2	3				1	-	1
CO3	3				1	-	1
CO4	3				1	-	1
CO5	3				1	-	1

Legend: 3-High Correlation, 2-Medium Correlation, 1-Low Correlation

Instructional Strategy

- It is advised that teachers take steps to pique pupils' attention and boost their curiosity to learn.
- Implement task-based learning activities where students work on specific tasks or projects.
- Incorporate technology tools and resources, such as online platforms, interactive multimedia, and virtual communication tools, to enhance engagement and provide additional practice opportunities.
- Incorporate formative and summative assessments to gauge student progress and provide targeted feedback.
- Throughout the course, a theory-demonstrate-practice-activity strategy may be used to ensure that learning is outcome and employability based.
- All demonstrations/Hand-on practices may be followed in the real environment as far as possible.

1020235336	**Lean Manufacturing**	L	T	P	C
PRACTICUM		2	0	2	3

Assessment Methodology:

	Continuous Assessment (40 marks)				End Semester Examination (60 marks)
	CA1	CA2	CA3	CA4	
Mode	Written Test Theory (Any Two Units)	Written Test Theory (Another Two Units)	Practical Test (All Exercises)	Written Test (Complete Theory Portions)	Written Examination (Complete Theory Portions)
Duration	2 Periods	2 Periods	3 Hours	3 Hours	3 Hours
Exam Marks	50	50	100	100	100
Converted to	10	10	15	15	60
Marks	10		15	15	60
Tentative Schedule	6th Week	12th Week	15th Week	16th Week	

Note:

- **CA1 and CA2:** Assessment written test should be conducted for 50 Marks. The marks scored will be converted to 10 Marks for each test. Best of one will be considered for the internal assessment of 10 Marks.

  CA1 and CA2, Assessment written test should be conducted for two units as below.

  Answer any Five questions. (5 X 10 Marks = 50 Marks).

  Eight questions will be asked, students should write Five questions.

  Each unit Four questions can be asked. Each question may have subdivisions. Maximum two subdivisions shall be permitted.
- **CA 3:** All the exercises/experiments should be completed and kept for the practical test. The students shall be permitted to select any one experiment by lot for the test. The

practical test should be conducted as per the scheme of evaluation as below. The marks awarded for 100 marks will be converted to 15 Marks for the internal mark.

Practical documents should be maintained for every exercise / experiment immediately after completion of the practice. The practical document should be submitted for the practical test. Each exercise/experiment should be evaluated for 10 Marks. The total marks awarded should be converted to 30 Marks for the practical test as per the scheme of evaluation as below.

The details of the practical documents to be prepared as per the instruction below.

Each exercise should be completed on the day of practice. The same shall be evaluated for 10 marks on the day or next day of practice before commencement of the next exercise.

This documentation can be carried out in a separate notebook or a printed manual or a file with documents. The Procedure, steps, observations and report should be written by the student manually in the documents. The evaluated practical document should be submitted for the Practical Test (CA3). The mark scored by the students should be converted to 30 marks. The same should be included as per the allocation in the practical test.

The detailed date of the practices and its evaluations should be maintained in the course logbook. The log book and the practical documents should be submitted for the verification by the Flying Squad and DOTE Official.

SCHEME OF EVALUATION - Practical Test

Sl.No.	Description	Marks
A	Aim / Description	10
B	Procedure / Steps	20
C	Presentation / Report	30
E	Practical document (All Practicals)	30
F	Viva Voce	10
Total		100

1020235336	**Lean Manufacturing**	L	T	P	C
PRACTICUM		2	0	2	3

CA4: Model examination should be conducted for complete theory portions as per the end semester question pattern. The marks awarded should be converted to 15 marks for the internal assessment.

Question Pattern:

Answer Ten questions by selecting two questions from each unit. Each question carries 10 marks each.

Four questions will be asked from every unit, students should write any two questions. The question may have two subdivisions only.

Syllabus Contents.

UNIT I	**Introduction**	
Lean Manufacturing: Introduction, Definitions of Lean manufacturing, explaining basic concepts. Overview of historical development. Management theory. Primary Tools of Lean manufacturing: 5-S, Workplace organization, Total Productive Maintenance, Process mapping - Value stream mapping, Work cell. Secondary Tools of Lean manufacturing: Objective and benefits of Secondary lean tool, Cause and Effect diagram, Pareto chart, Spider chart, Poka yoke, Kanban, Automation, Single minute exchange of die (SMED), Design for manufacturing and assembly, Just in time (JIT), Visual workplace, OEE.		6
UNIT II	**Total Quality Management**	
TQM Tools And Techniques: The seven traditional tools of quality, New management tools, and Six sigma: Concepts, methodology, applications to manufacturing, service sector including IT, Benchmarking, Reason to bench mark, Benchmarking process, FMEA, Stages, and Types. Quality circles , Quality Function Deployment (QFD), Taguchi quality loss function, TPM ,Concepts, improvement needs, Cost of Quality , Performance measures.		6

1020235336	**Lean Manufacturing**	L	T	P	C
PRACTICUM		2	0	2	3

UNIT III	**Total Productive Management**
Total Productive Maintenance: Objectives and functions, Tero technology, Reliability Centered Maintenance (RCM), maintainability prediction, availability and system effectiveness, maintenance costs, maintenance organization. Minimal repair, maintenance types, balancing PM and breakdown maintenance, Primary and secondary tool for TPM, Case studies related to TPM.	6
UNIT IV	**Design of Experiments, Designing for Quality, Quality in Service Sectors.**
Design of Experiments: Introduction , Methods, Taguchi approach, Achieving robust design, Steps in experimental design Designing for Quality: Introduction to Concurrent Engineering, Quality Function Deployment (QFD) and Failure Mode and Effect Analysis (FMEA), Concept, Methodology and Application (with case studies). Quality in Service Sectors: Characteristics of Service Sectors, Quality Dimensions in Service Sectors, Measuring Quality in Different Service Sectors.	6
UNIT V	**Six Sigma, Quality Circle.**
Six Sigma: Meaning of six sigma, Why six sigma, Six sigma improvement model, DMAIC and DMADV principle, , building six sigma organization and culture, Six sigma application. Quality Circle: Quality Circle structure, Its operation, Characteristics of Quality Circle, developing quality circle in organization, Basic problem solving techniques.	6
PRACTICAL EXERCISES	20
Exercise 1: Conduct a 5S audit in a specific area of the plant. Create a checklist for each of the 5S steps and evaluate and implement improvements. **Exercise 2**: Create a preventive maintenance plan for a critical piece of equipment. Document the steps, schedule the maintenance tasks, and assign responsibilities to maintenance personnel.	

Exercise 3: Identify a recurring equipment issue and organize a Kaizen event to address it. Use root cause analysis to identify the underlying problem and implement a solution using the PDCA cycle. **Exercise 4**: Create an SOP for a routine maintenance task. **Exercise 5**: Root Cause Analysis with 5 Whys. Identify a specific issue and ask "Why?" it occurred. Continue asking "Why?" for each answer until the root cause is identified (typically five times). Document the process and solutions to address the root cause. **Exercise 6**: Pareto Chart Creation. Use the data collected on defects to create a Pareto chart. List the types of defects in descending order of frequency and plot the cumulative percentage. Identify the top 20% of defects that cause 80% of the problems and prioritize them for improvement.	
ASSESSMENT TEST AND REVISION	10
Total	60

Reference

1. J Evans and W Linsay, The Management and Control of Quality, 6'th Edition, Thomson, 2005.
2. Besterfield, D H et al., “Total Quality Management”, 3rd Edition, Pearson Education, 2008.
3. D. C. Montgomery, Design and Analysis of Experiments, John Wiley & Sons, 6th Edition, 2004.
4. K C Jain and A K Chitale , “Quality Assurance and Total Quality Management (ISO 9000, QS 9000 ISO 14000)” by, Khanna Publishers.
5. B. L. Hanson & P. M. Ghare, “Quality Control & Application”, Prentice Hall of India.

1020235336	**Lean Manufacturing**	L	T	P	C
PRACTICUM		2	0	2	3

END SEMESTER EXAMINATION QUESTION PATTERN – Theory Exam

Duration: 3 Hrs. **Max. Marks: 100**

Note: Answer Ten questions by selecting two questions from each unit. Each question carries 10 marks each.

Instruction to the Question Setters

Four questions will be asked from every unit, students should write any two questions for 10 marks. The question may have two subdivisions only.

1020235440	MAINTENANCE, REPAIR AND SERVICE	L	T	P	C
PRACTICUM		1	0	4	3

Introduction:

To meet out Globalization, technological advances and to sustain, we have to explore the knowledge about machine tools covering the various operations and Maintenance skill sets required for the development of a nation and its people.

Course Objectives:

1. To enable the student to understand the principles, functions and practices adopted in industry for the successful management of maintenance activities.
2. To explain different maintenance categories like preventive maintenance, condition monitoring and repair of machine tool.
3. To illustrate some of the simple instruments used for condition monitoring in industry.
4. To Understand the Repairs procedure and Service methods followed in the Industry.

Course Outcomes

On successful completion of this course,the student will be able to,

CO1: Describe about Maintenance principles, types of Maintenance and Maintenance planning.

CO2 : Explain the Maintenance Economics and Maintenance organization.

CO3 : Demonstrate the necessary skills for fixing and testing of different components and drives used in the Industry

CO4 : Explain the Repairs and service methodology followed in the Industry

CO5 : Demonstrate the necessary skills for Repairing and servicing of different Machine Tools used in the Industry

Pre-requisites:

Applied science, Basic workshop practice, Manufacturing Process, Machine Tool theory.

1020235440	MAINTENANCE, REPAIR AND SERVICE	L	T	P	C
PRACTICUM		1	0	4	3

CO/PO Mapping

CO / PO	PO1	PO2	PO3	PO4	PO5	PO6	PO7
CO1	1		1	3	1		
CO2	1		1	3	-		
CO3	1		1	3	1		
CO4	1		1	3	-		
CO5	1		1	3	1		

Legend: 3-High Correlation, 2-Medium Correlation, 1-Low Correlation

Instructional Strategy:

- Engage and Motivate: Instructors should actively engage students to boost their learning confidence.
- Real-World Relevance: Incorporate relatable, real-life examples and engineering applications to help students understand and appreciate course concepts.
- Interactive Learning: Utilize demonstrations and plan interactive student activities for an engaging learning experience.
- Application-Based Learning: Employ a theory-demonstrate-practice-activity strategy throughout the course to ensure outcome-driven learning and employability.
- Simulation and Real-World Practice: Conduct demonstrations and hands-on activities in a simulated environment, transitioning to real-world scenarios when possible.
- Encourage Critical Analysis: Foster an environment where students can honestly assess experiment outcomes and analyse potential sources of error in case of discrepancies

1020235440	MAINTENANCE, REPAIR AND SERVICE	L	T	P	C
PRACTICUM		1	0	4	3

Assessment Methodology:

	Continuous Assessment (40 marks)				End Semester Examination (60 marks)
	CA1	**CA2**	**CA3**	**CA4**	
Mode	Practical Test	Practical Test	Written Test Theory	Practical Test	Practical Examination
Portion	Cycle I Exercises	Cycle II Exercises	All Units	All Exercises	All Exercises
Duration	2 Periods	2 Periods	3 Hours	3 Hours	3 hours
Exam Marks	60	60	100	100	100
Converted to Marks	10	10	15	15	60
Marks	10		15	15	60
Tentative Schedule	7th Week	14th Week	15th Week	16th Week	

Note:

- **CA1 and CA2:** All the exercises/experiments should be completed as per the portions above and kept for the practical test. The students shall be permitted to select any one by lot for the test. The practical test should be conducted as per the scheme of evaluation as below. The marks awarded shall be converted to 10 Marks for each assessment test. Best of one will be considered for the internal assessment of 10 Marks.

  Practical documents should be maintained for every exercise / experiment immediately after completion of the practice. The practical document should be submitted for the practical test. The same should be evaluated for 10 Marks for each exercise/experiment. The total marks awarded should be converted to 10 Marks for the practical test as per the scheme of evaluation as below.

The details of the documents to be prepared as per the instruction below.

Each exercise should be completed on the day of practice. The same shall be evaluated for 10 marks on the day or next day of practice before commencement of the next exercise.

This documentation can be carried out in a separate notebook or a printed manual or a file with documents. The procedure and sketch should be written by the student manually in the documents.

The detailed date of the practices and its evaluations should be maintained in the course logbook. The log book and the practical documents should be submitted for the verification by the Flying Squad and DOTE Official.

SCHEME OF EVALUATION

PART	DESCRIPTION	MARKS
A	Aim & Tools required	10
B	Procedure / Sketch / Setting / Tool Handling	20
C	Alignment test / Dismantling / Assembling	20
TOTAL		50
D	Practical Documents (As per the portions)	10
		60

Cycle I: 1, 2, 3, 4 and 5.

Cycle II: 6, 7, 8, 9 and 10.

- **CA 3:** Written Test for complete theory portions should be conducted for 100 Marks as per the question pattern below. The marks scored will be converted to 15 Marks for internal assessment.

1020235440	MAINTENANCE, REPAIR AND SERVICE	L	T	P	C
PRACTICUM		1	0	4	3

Question pattern – Written Test Theory

Description		Marks	
Part – A	30 MCQ from the complete theory portions.	30 X 1 Mark	30 Marks
Part – B	Seven Questions to be answered out of 10 Questions.	7 X 10 Marks	70 Marks
TOTAL			100 Marks

- **CA 4:** All the exercises/experiments should be completed and kept for the practical test. The students shall be permitted to select any one by lot for the test. The practical test should be conducted as per the scheme of evaluation below. After completion of all the exercises the practical test should be conducted as per End Semester Examination question pattern scheme of evaluation. The marks awarded should be converted to 15 Marks for the internal assessment.

Syllabus Contents

Theory Portion	
Unit I: Maintenance: Basic principles of maintenance planning – Importance of Maintenance - objectives and principles of planned maintenance activity - importance and benefits of sound maintenance systems – Reliability and machine availability – MTBF, MTTR and MWT – Factors of availability – Maintenance organization. Maintenance – Types – Preventive, Breakdown, Scheduled – Comparison – Maintenance Schedule – Maintenance Economics – Condition Monitoring – Cost Comparison – With and Without condition monitoring – Introduction to TPM – TPM Pillars	8
Practical Exercises	
1. Testing of Lathe machine alignments and prepare a test chart. a) Level of lathe. b) True running of spindle. c) Alignment of both centres. d) Parallelism of main spindle to saddle movements	4

1020235440	MAINTENANCE, REPAIR AND SERVICE	L	T	P	C
PRACTICUM		1	0	4	3

2. Testing of Pillar type drilling machine alignments and prepare a test chart. a) Level of the Drilling machine. b) True running of Spindle Taper. c) Squareness of Spindle axis with Table	4
3. Dismantle and assemble the tailstock of the lathe. Identify the troubles and mention the corrective measures.	4
4. Dismantle and assemble of D C Motor. Identify the troubles and mention the corrective measures.	4
5. Dismantle and assemble the Hydraulic cylinder. Identify the troubles and mention the corrective measures.	4
6. Dismantling and assembly of Directional control valve. Identify the troubles and mention the corrective measures.	4
Theory Portion	
Unit II : Repair and Service: Repair methods of the machine components - Failure analysis - Logical fault location – Sequential fault location – Equipment records – Job order system – Use of computers in maintenance – Repair cycle. Transmission systems - Belt drive - chain drive - gear drive. Tools required for the installation and maintenance.	7
Practical Exercises	
7. Bearing: Inspection, Removal, Cleaning, lubrication and refitting of bearings. Dismantle and assemble the bearing from a shaft assembly unit.	4
8. Couplings: Maintenance, Repair and replacement and alignment of shaft. Installation and alignment of driving and driven shafts using Plummer block bearings.	4
9. Belts: Mounting of belts and checking of slip. Installation of belt drives using Motor, V belt and driving and driven pulley.	4
10. Chain drive: Tighten and replace the chain. Installation of chain drives using motor, sprocket and chain drive.	4
11. Gear drives : (i) Checking of correct meshing (ii) Checking of wear of teeth (iii) Checking of crack / damage.	4
12. Dismantling, inspecting and assembling of constant mesh gear box and find out the gear ratios.	4
Assessment Test and Revision	12
Total	75

1020235440	MAINTENANCE, REPAIR AND SERVICE	L	T	P	C
PRACTICUM		1	0	4	3

Suggested List of Students Activity:

1. Observe the Lathe, drilling, Milling, Grinding and CNC machine of the institute and study its Operation and Maintenance manual .
2. List the possible Breakdown maintenance procedure that can be done on that machine.

TEXT BOOKS / REFERENCE BOOKS

1. Srivastava S K., "Industrial Maintenance Management", 7th Edition, S. Chand and Co 2019.
2. Venkataraman K "Maintenance Engineering and Management", 11th Edition, PHI Learning Pvt. Ltd., 2017.
3. Bhattacharya S N., "Installation, Servicing and Maintenance" , 10th Edition, S. Chand and Co., 2019.

END SEMESTER EXAMINATION – PRACTICAL EXAM

Note:

All the exercises should be given in the question paper and students are allowed to select by a lot or the question paper allotted from the DOTE shall be used.

Practical document should be submitted for the examination with a bonafide certificate.

Allocation Marks for End Semester Exam

Part	Description	Marks
A	Aim & Tools required	10
B	Procedure / Sketch / Setting / Tool Handling	20
C	Alignment test / Dismantling / Assembling	20
D	Troubles / Report / Test Chart /	10
E	Written test (Theory Portions)	30
F	Viva Voce	10
	TOTAL MARKS	100

Note: For the written test 30 MCQ shall be asked from the theory portions.

1020235440	MAINTENANCE, REPAIR AND SERVICE	L	T	P	C
PRACTICUM		1	0	4	3

Equipment / Facilities required to conduct the Practical Course.

S.No	Name of the Equipment's	Quantity Required
1	Tail stock	2 Nos
2	AC Induction motor	2 Nos
3	DC Motor	2 Nos
4	Lathe	2 Nos
5	Drilling Machine	2 Nos
6	Milling Machine	2 Nos
7	Surface Grinder	1 No.
8	Tool & Cutter Grinder	1 No.
9	Bearing with shaft assembly unit	2 Nos
10	Plummer block	2 Nos
11	Abrasive belt grinder	1 No.
12	Belt drive conveyor unit	2 Nos
13	Counter mesh gear box	1 No.
14	Steering gear box	1 No.
15	Magnetic stand with dial indicator	4 Nos.
16	Straight edge	2 Nos
17	Spirit level	2 Nos
18	Test Mandrels	2 Nos

1020235541	CNC Programming	L	T	P	C
PRACTICUM		1	0	4	3

Introduction

Computer Numerical Control (CNC) programming is a vital subject for diploma engineering students, focusing on the automation of machine tools through computer systems. CNC technology is foundational in modern manufacturing, allowing for precision, efficiency, and the ability to produce complex parts with minimal human intervention.

Proficiency in CNC programming opens up numerous career opportunities in various industries such as automotive, aerospace, manufacturing, and more. CNC programmers and operators are essential for creating high-quality, precision-engineered products.

This course equips students with the knowledge and skills necessary to excel in the dynamic and technologically advanced field of CNC machining, making them valuable assets in the engineering and manufacturing sectors.

Course Objectives

The objective of this course is to prepare the student,

- To understand the fundamentals of CNC
- To explain the construction and tooling of the CNC machine
- To Programme Production Jobs for CNC Turning Centre for different operations
- To Programme production jobs for CNC Vertical Machining Centre for different operations
- To operate a CNC lathe
- To operate a CNC milling machine

Course Outcomes

On successful completion of this course, the student will be able to,

CO1: Recall safety procedure to be followed while working in CNC Machines.

CO2: Create CNC part program for cylindrical components using CNC Turning Centre

CO3: Produce components using CNC Turning centre

CO4: Create CNC part program for rectangular components using CNC Machining Centre

CO5: Produce components using CNC Machining centre

1020235541	CNC Programming	L	T	P	C
PRACTICUM		1	0	4	3

Pre-requisites

Knowledge of CNC Machines, Tools and accessories.

CO/PO Mapping

CO / PO	PO1	PO2	PO3	PO4	PO5	PO6	PO7
CO1	3	2	2	3	1	3	3
CO2	3	2	3	3	2	3	3
CO3	3	3	2	3	1	3	3
CO4	3	2	3	3	1	3	3
CO5	3	2	3	3	2	3	3

Legend: 3-High Correlation, 2-Medium Correlation, 1-Low Correlation

Instructional Strategy:

- It is advised that teachers take steps to pique pupils' attention and boost their curiosity to learn.
- Implement task-based learning activities where students work on specific tasks or projects.
- Incorporate technology tools and resources, such as online platforms, interactive multimedia, and virtual communication tools, to enhance engagement and provide additional practice opportunities.
- Incorporate formative and summative assessments to gauge student progress and provide targeted feedback.
- Throughout the course, a theory-demonstrate-practice-activity strategy may be used to ensure that learning is outcome and employability based.
- All demonstrations/Hand-on practices may be followed in the real environment as far as possible.

1020235541	CNC Programming	L	T	P	C
PRACTICUM		1	0	4	3

Assessment Methodology:

	Continuous Assessment (40 marks)				End Semester Examination (60 marks)
	CA1	**CA2**	**CA3**	**CA4**	
Mode	Practical Test	Practical Test	Written Test Theory	Practical Test	Practical Examination
Portion	Cycle I Exercises	Cycle II Exercises	All Portions	All Exercises	All Exercises Experiments
Duration	2 Periods	2 Periods	3 Hours	3 Hours	3 hours
Exam Marks	60	60	100	100	100
Converted to Marks	10	10	15	15	60
Marks	10		15	15	60
Tentative Schedule	7th Week	14th Week	15th Week	16th Week	

Note:

- **CA1 and CA2:** All the exercises/experiments should be completed as per the portions above and kept for the practical test. The students shall be permitted to select any one by lot for the test. The practical test should be conducted as per the scheme of evaluation as below. The marks awarded shall be converted to 10 Marks for each assessment test. Best of one will be considered for the internal assessment of 10 Marks.

  Practical documents should be maintained for every experiment immediately after completion of the practice. The practical document should be submitted for the practical test. The same should be evaluated for 10 Marks for each exercise/experiment. The total marks awarded should be converted to 10 Marks for the practical test as per the scheme of evaluation as below.

1020235541	CNC Programming	L	T	P	C
PRACTICUM		1	0	4	3

The details of the documents to be prepared as per the instruction below.

Each experiment should be completed on the day of practice. The same shall be evaluated for 10 marks on the day or next day of practice before commencement of the next experiment.

This documentation can be carried out in a separate notebook or a printed manual or a file with documents. The part program, procedure, sketch and output should be written by the student manually in the documents.

The detailed date of the practices and its evaluations should be maintained in the course logbook. The log book and the practical documents should be submitted for the verification by the Flying Squad and DOTE Official.

SCHEME OF EVALUATION

PART	DESCRIPTION	MARKS
A	Aim & Tools Required	10
B	Writing Part Program	20
C	Editing Program in machine and Component	20
TOTAL		50
D	Practical Documents (As per the portions)	10
		60

Cycle I: 1, 2, 3 and 4.

Cycle II: 5, 6, 7, 8 and 9.

- **CA 3:** Written Test for complete theory portions should be conducted for 100 Marks as per the question pattern below. The marks scored will be converted to 15 Marks for internal assessment.

1020235541	CNC Programming	L	T	P	C
PRACTICUM		1	0	4	3

Question pattern – Written Test Theory

Description		Marks	
Part – A	30 MCQ Questions.	30 X 1 Mark	30 Marks
Part – B	7 Questions to be answered out of 10 Questions.	7 X 10 Marks	70 Marks
TOTAL			100 Marks

- **CA 4:** All the exercises/experiments should be completed and kept for the practical test. The students shall be permitted to select any one by lot for the test. The practical test should be conducted as per the scheme of evaluation below. After completion of all the exercises the practical test should be conducted as per End Semester Examination question pattern scheme of evaluation. The marks awarded should be converted to 15 Marks for the internal assessment.

SCHEME OF EVALUATION

Model Practical Examination and End Semester Examination - Practical Exam

PART	DESCRIPTION	MARKS
A	Aim & Tools Required	10
B	Writing Part Program	20
C	Simulation	10
D	Editing Program in machine and Component	20
E	Written Test (Theory Portions)	30
F	Viva Voce	10
	TOTAL	100

Note: For the written test 30 MCQ shall be asked from the theory portions.

1020235541	CNC Programming	L	T	P	C
PRACTICUM		1	0	4	3

Syllabus contents

THEORY	
Introduction to NC, CNC and DNC – Components of a CNC system: Program, Machine Control Unit, and Machine Tool – Toolings for CNC – ISO Designation for Tooling – Tool Material Selection – Tool Inserts. Steps involved in CNC Programming: Process Planning, Part Programming, Program Entry, Program Verification, and Production – Manual Part Programming, Data required for Manual Part Programming – Coordinate system – Designation of axes – Datum points and Reference Points – NC Dimensioning: Absolute, and Incremental - CNC Programming procedure – Format of a program. CNC Part Programming for Turning Centres – Axes system used for turning - Preparatory functions (G-Codes) for turning Centres – Auxiliary functions (M-Codes) for turning centres – Tool function codes – Speed function codes – Feed Specification codes - Rapid Positioning – Tool nose radius compensation - Linear Interpolation – Circular Interpolation/Filleting. Canned/Fixed Cycles: Box turning cycle (G90) - Taper turning (G90) – Facing/Taper facing cycle (G94) – Grooving/Parting cycle (G75) – Single threading cycle (G92) and Multiple threading cycle (G76) – Multiple turning cycle or Stock removal cycle (G70 & G71) – Peck drilling cycle (G74) – Boring/Taper Boring cycle (G90) CNC Part Programming for Machining Centres – Axes system used for Machining centres - Preparatory functions (G-Codes) for Machining Centres – Auxiliary functions (M-Codes) for Machining centres – Preset – Cutter radius compensation – Tool length compensation - Linear Interpolation – Circular Interpolation. Canned Cycles: Drilling cycle (G81) – Counter sinking/Counter boring (G82) – Tapping cycle (G84) – Reaming Cycle (G85) – Boring Cycle (G86) – Peck	15

drilling cycle (G83) – Sub Program – Mirroring – Circular Pocketing (G170 & G171) – Rectangular Pocketing (G172 & G173).		
Ex.No	Name of the Experiment	
1.	Write a Part Program for producing the component shown below in the turning center, simulate it and produce the component – Using Linear and Circular Interpolation. Raw Material Size: φ 30 mm dia x 41 mm length. Component Diagram: 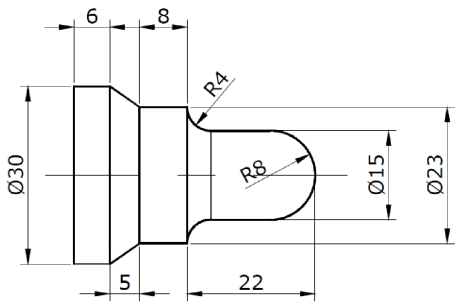	5
2.	Write a Part Program for producing the component shown below in the turning center, simulate it and produce the component – Using Box turning cycle, Facing cycle, and Grooving cycle (G90, G94, and G75). Raw Material Size: φ 30 mm dia x 70 mm length Component Diagram: Note: Facing 0.5 mm (20 mm to 19.5 mm)	5

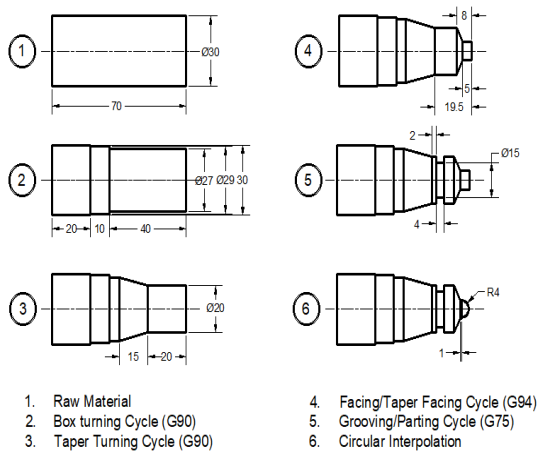

3.	Write a Part Program for producing the component shown below in the turning center, simulate it and produce the component – Using the threading cycle (G92/G76). Raw Material Size: φ 25 mm dia x 70 mm length Component Diagram: 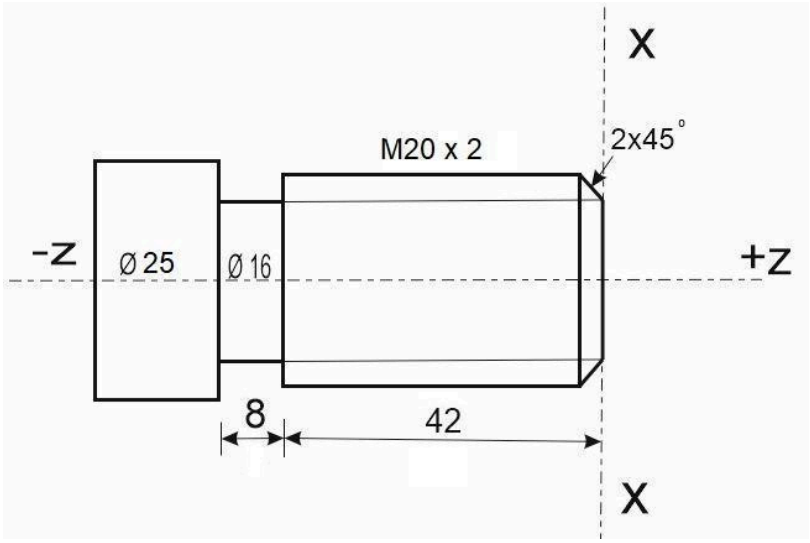 	5
4.	Write a Part Program for producing the component shown below in the turning center, simulate it and produce the component – Using multiple turning cycle (G70 & G71). Raw Material Size: φ 30 mm dia x 41 mm length Component Diagram: 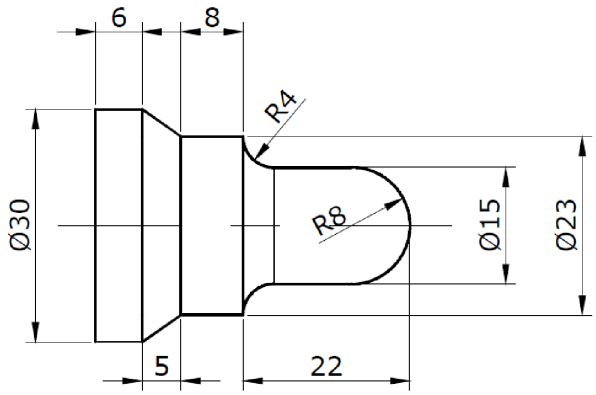 	5

5.	Write a Part Program for producing the component shown below in the turning center, simulate it and produce the component – Using Peck drilling and Boring cycles (G74 & G90) Raw Material Size: φ 30 mm dia x 70 mm length Component Diagram: Steps: (1). Pilot Drill – 3 mm dia, (2). Drill 10 mm dia, (3). Boring to 15 mm dia, (4). Taper Boring to 21 mm dia 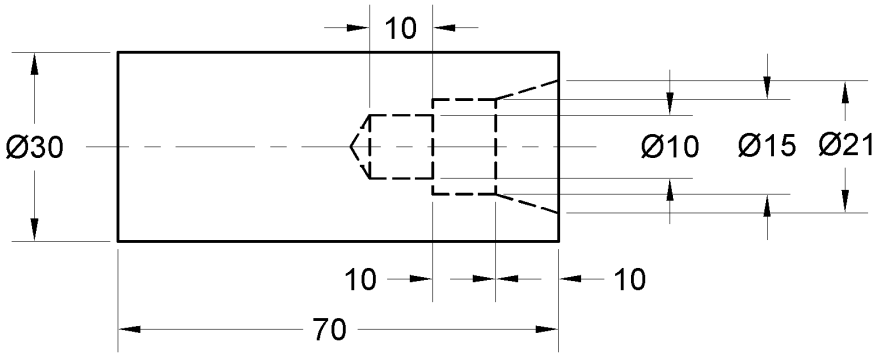 	5
6.	Write a Part Program for producing the component shown below in the Machining center, simulate it and produce the component – Using Linear and Circular Interpolation Raw Material Size: 100 mm x 100 mm x 15 mm Component Diagram: 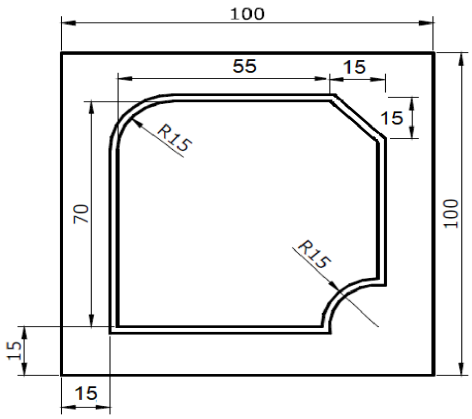 	5

7.	Write a Part Program for producing the component shown below in the Machining center, simulate it and produce the component – Using Peck drilling, Reaming, Tapping and counter-sinking cycles Raw Material Size: 80 mm x 80 mm x 20 mm Component Diagram: 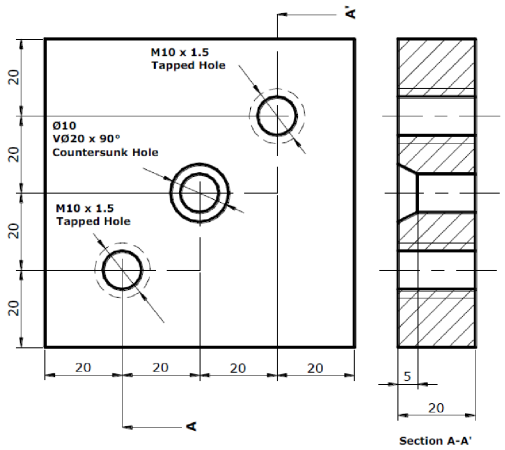 	5
8.	Write a Part Program for producing the component shown below in the Machining center, simulate it and produce the component – Using Mirroring function Raw Material Size: 120 mm x 120 mm x 20 mm Component Diagram: 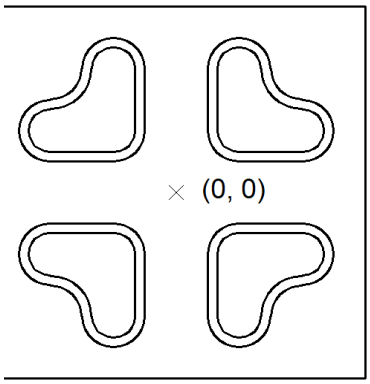 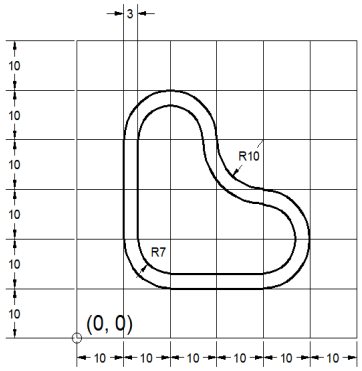 	5

9.	Write a Part Program for producing the component shown below in the Machining center, simulate it and produce the component – Using Circular and Rectangular Pocketing Raw Material Size: 100 mm x 100 mm x 20 mm Component Diagram: 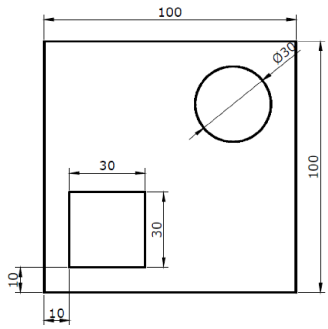 	5
	Revision + Test	15
	Total	75

Textbook:

1. S.K. Sinha, CNC Programming, Galgotia Publications Pvt Ltd., 2011
2. P. M. Agrawal, and V. J. Patel, CNC Fundamentals and Programming, First Edition, Charotar Publishing House Pvt. Limited, 2009.
3. Pawan Negi, Mangey Ram, and Om Prakash Yadav, Basics of CNC Programming, River Publishers, 2019
4. Peter Smid, CNC Control Setup for Milling and Turning Mastering CNC Control Systems, Industrial Press, 2010.

Website links for reference:

1. https://www.youtube.com/watch?v=_5r2XR1h1aQ
2. https://www.youtube.com/watch?v=eJ432X2dR9A

1020235541	CNC Programming	L	T	P	C
PRACTICUM		1	0	4	3

END SEMESTER EXAMINATIONS – PRACTICAL EXAM

Note:

All the exercises/experiments should be completed before the Board Practical Examinations. End Semester Practical examination should be conducted for all the exercises / experiments for 100 Marks. Students will be permitted to select any one exercise by lot or question paper supplied by the DOTE Exam section shall be used. The practical document prepared by the student should be submitted with a Bonafide Certificate.

SCHEME OF EVALUATION

PART	DESCRIPTION	MARKS
A	Aim & Tools Required	10
B	Writing Part Program	20
C	Simulation	10
D	Editing Program in machine and Component	20
E	Written Test	30
F	Viva Voce	10
	TOTAL	100

Note: For the written test 30 MCQ shall be asked from the theory portions.

LIST OF EQUIPMENT

1. CNC Turning centre - 2 No.
2. CNC Milling Centre - 2 No.
3. CNC Simulation Software
4. Computer - 30 Nos.

1020235542	**Systems Applications and Product (SAP)**	L	T	P	C
PRACTICUM		1	0	4	3

Introduction:

SAP stands for Systems, Applications, and Products. The practical use of SAP was first seen when data related to accounts and payroll was stored in an electrical device with specific programs to use the database logically and practically. ERP software is one of the most critical aspects of SAP software. To understand why the SAP Course is so important and popular, one needs to know about the areas where it works and the other aspects attached to SAP. Almost 80% of medium and small-sized organizations have joined the list of SAP services alongside large organizations.

Course Objectives:

After completing this subject, the student will be able to

- Equip with the skills and knowledge of SAP
- Develop and maintain SAP applications using various programming language.
- Understand the TDA/SAP process
- Understand the key steps in the TDA/SAP process.
- Be able to communicate the TDA/SAP process to others.

Course Outcomes

On successful completion of this course, the student will be able to

CO1: Understand the fundamental concepts of Enterprise Resource Planning (ERP) and SAP.

CO2: Establish a strong foundation in ABAP programming.

CO3: Develop skills in managing data structures using the ABAP Data Dictionary.

CO4: Introduce Object-Oriented ABAP concepts.

CO5: Master the creation of various types of ABAP reports.

Pre-requisites:

Knowledge of basics of Engineering and Industrial engineering

1020235542	**Systems Applications and Product (SAP)**	L	T	P	C
PRACTICUM		1	0	4	3

CO/PO Mapping

CO / PO	PO1	PO2	PO3	PO4	PO5	PO6	PO7
CO1	-	-	-	-	3	1	3
CO2	-	-	-	-	3	3	3
CO3	-	-	-	1	-	3	2
CO4	-	1	3	3	2	3	2
CO5	-	2	3	3	3	3	3

Legend: 3-High Correlation, 2-Medium Correlation, 1-Low Correlation

Instructional Strategy:

- The instructional strategy for teaching SAP in polytechnic colleges emphasizes practical application and industry relevance.
- Through a curriculum aligned with the state technical education board, the syllabus is broken down into manageable units, prioritizing topics pertinent to Indian engineering contexts.
- Engage and Motivate: Instructors should actively engage students to boost their learning confidence
- Real-World Relevance: Incorporate relatable, real-life examples and engineering applications to help students understand and appreciate course concepts
- Interactive Learning: Utilize demonstrations and plan interactive student activities for an *engaging* learning experience.
- Simulation and Real-World Practice: Conduct demonstrations and hands-on activities in a simulated environment, transitioning to real-world scenarios when possible.
- Encourage Critical Analysis: Foster an environment where students can honestly assess experiment outcomes and analyze potential sources of error in case of discrepancies.

1020235542	**Systems Applications and Product (SAP)**	L	T	P	C
PRACTICUM		1	0	4	3

- Continuous feedback mechanisms ensure the refinement and effectiveness of the instructional approach.

Assessment Methodology:

	Continuous Assessment (40 marks)				**End Semester Examination (60 marks)**
	CA1	**CA2**	**CA3**	**CA4**	
Mode	Practical Test	Practical Test	Written Test Theory	Practical Test	Practical Examination
Portion	Cycle I Exercises	Cycle II Exercises	All Portions	All Exercises	All Exercises Experiments
Duration	2 Periods	2 Periods	3 Hours	3 Hours	3 hours
Exam Marks	60	60	100	100	100
Converted to Marks	10	10	15	15	60
Marks	10		15	15	60
Internal Marks	40				
Tentative Schedule	7th Week	14th Week	15th Week	16th Week	

Note:

- **CA1 and CA2:** All the exercises/experiments should be completed as per the portions above and kept for the practical test. The students shall be permitted to select any one by lot for the test. The practical test should be conducted as per the scheme of evaluation as below. The marks awarded shall be converted to 10 Marks for each

assessment test. Best of one will be considered for the internal assessment of 10 Marks.

Practical documents should be maintained for every experiment immediately after completion of the practice. The practical document should be submitted for the practical test. The same should be evaluated for 10 Marks for each exercise/experiment. The total marks awarded should be converted to 10 Marks for the practical test as per the scheme of evaluation as below.

The details of the documents to be prepared as per the instruction below.

Each experiment should be completed on the day of practice. The same shall be evaluated for 10 marks on the day or next day of practice before commencement of the next experiment.

This documentation can be carried out in a separate notebook or a printed manual or a file documents. The Program, Procedure, Sketch and Output should be written by the student manually. The detailed date of the practices and its evaluations should be maintained in the course logbook. The log book and the practical documents should be submitted for the verification by the Flying Squad and DOTE Official.

SCHEME OF EVALUATION

PART	DESCRIPTION	MARKS
A	Aim / Procedure	10
B	Steps / Execution	20
C	Report / Presentation	20
TOTAL		50
D	Practical Documents (As per the portions)	10
		60

Cycle I: 1, 2, 3, 4 and 5.

Cycle II: 6, 7, 8, 9 and 10.

1020235542	Systems Applications and Product (SAP)	L	T	P	C
PRACTICUM		1	0	4	3

- **CA 3:** Written Test for complete theory portions should be conducted for 100 Marks as per the question pattern below. The marks scored will be converted to 15 Marks for internal assessment.

Question pattern – Written Test Theory

Description		Marks	
Part – A	30 MCQ Questions.	30 X 1 Mark	30 Marks
Part – B	7 Questions to be answered out of 10 Questions.	7 X 10 Marks	70 Marks
TOTAL			100 Marks

- **CA 4:** All the exercises/experiments should be completed and kept for the practical test. The students shall be permitted to select any one by lot for the test. The practical test should be conducted as per the scheme of evaluation below. After completion of all the exercises the practical test should be conducted as per End Semester Examination question pattern scheme of evaluation. The marks awarded should be converted to 15 Marks for the internal assessment.

SCHEME OF EVALUATION

Model Practical Examination and End Semester Examination - Practical Exam

PART	DESCRIPTION	MARKS
A	Aim / Procedure	10
B	Steps / Execution	20
C	Report / Presentation	20
D	Result	10
E	Written Test (Theory Portions)	30
F	Viva Voce	10
	TOTAL	100

Note: For the written test 30 MCQ shall be asked from the theory portions.

1020235542	Systems Applications and Product (SAP)	L	T	P	C
PRACTICUM		1	0	4	3

Syllabus Contents

Theory Portion- Unit I : SAP:	
Introduction–SAP - SAP r/3 architecture - central system – distributed presentation - 2-tier configuration - 3-tier configuration. System landscape and flow - single system landscape - two system landscape - three system landscape - multi system landscape. Installation of sap - installation concepts on windows & UNIX and quick sizing - naming convention, software kit, sap licensing - installation procedure – windows application server for unix sap system - r/3 directory structure, kernel gui administrator – optimization – security. Operation modes - manual switching of op modes - exceptional mode – monitoring.	8
Practical Exercises	
Exercise 1: Creating and Maintaining Master Records, Architecture - Logon and Password Security, Protecting Special Users	5
Exercise 2: Creating and Maintaining Single and Mass Users and User Groups - Copying, Deleting.	5
Exercise 3: Creating and Maintaining Single and Mass Users and User Groups Locking / Unlocking Users.	5
Exercise 4: Create/Maintaining Authorization/Profile Manually	5
Exercise 5: Create/Maintaining Roles/Generating Profiles by using PFCG.	5
Theory Portion - Unit II : SAP General Administration:	
General Administration **–** client administration - client maintenance - copying client within r/3 system (local). copying client between r/3 systems (remote) - export/import - protecting client. Monitoring and verifying a client copy - deleting client - tips and troubleshooting.General administration - transport management system - tms terminology and concepts - configuring tms and checking transport directory - configuring transport domain, domain controller and group - configuring virtual sap system and displaying configuration - including sap systems in the transport	7

domain - creating consolidation and delivery routes - maintaining sap systems without common transport directory - configuring external systems - locking and unlocking tms for a sap system - deleting sap system from the transport domain - deleting tms configuration. Change and Transport System - releasing and transporting change request and tasks - customizing, workbench, transport organizer - importing change requests. Spool Administration - print related terminology in os/sap level - setting local, remote and front-end printing - logical and real spool server - managing spool requests using output controller - connecting output devices to window system – saplpd, TemSE, Authorization.	
Practical Exercises	
Exercise 6: Creating Consolidation and Delivery Routes- Maintaining SAP Systems without Common Transport Directory - Configuring External System.	5
Exercise 7: Locking and Unlocking TMS for a SAP System.	5
Exercise 8: Deleting SAP System from the Transport Domain.	5
Exercise 9: Deleting TMS Configuration From the Transport Domain.	5
Exercise 10: Connecting Output Devices to Window System.	5
Assessment Test and Revision	10
Total	75

Text and Reference Books:

1. Sushil Markandeya , Kaushik Roy, SAP ABAP: Hands-On Test Projects with Business Scenarios, Apress, 2014.
2. Martin Murray, Jawad Akhtar, Materials Management with SAP ERP: Functionality and Technical Configuration, SAP Press, First Edition, 2016.
3. Sudipta Malakar, SAP/ ABAP/ HANA Programming, BPB Publication, 2018

1020235542	**Systems Applications and Product (SAP)**	L	T	P	C
PRACTICUM		1	0	4	3

Web Reference:

- https://www.youtube.com/watch?v=1jFQMadZLfs
- https://www.coursera.org/sap
- Free SAP Training | openSAP
- SAP Help Portal

END SEMESTER EXAMINATIONS – PRACTICAL EXAM

Note:

All the exercises/experiments should be completed before the Board Practical Examinations. End Semester Practical examination should be conducted for all the exercises / experiments for 100 Marks. Students will be permitted to select any one exercise by lot or question paper supplied by the DOTE Exam section shall be used. The practical document prepared by the student should be submitted with a Bonafide Certificate.

SCHEME OF EVALUATION

Part	Description	Marks
A	Aim / Procedure	10
B	Steps / Execution	20
C	Report / Presentation	20
D	Result	10
E	Written Test (Theory Portions)	30
F	Viva Voce	10
TOTAL MARKS		100

1020235543	**Industrial IoT**	L	T	P	C
PRACTICUM		1	0	4	3

Introduction:

Industrial Internet of Things or IIoT refers to interconnected instruments, sensors and other devices which can be networked together in an industrial setting. This connectivity enables remote access, efficient monitoring, data acquisition and collection, analysis and exchange of different data sources and a lot more. IIoT solutions have enormous potential for increasing productivity, and are also known for their low cost and quick implementation.

Course Objectives:

The objective of this course is to enable the student to

- Understand the application of IIoT in automation of commercial and real world applications.
- Summarize the functions of various types of sensors.
- Understand the Designing Industrial IOT Systems for various applications.
- Facilitate the students to design simple IIoT concepts.

Course Outcomes:

On successful completion of this course, the student will be able to

CO1: Explain the basic computing features of the Arduino platform and programming.

CO2: Adapt to the Arduino platform and display their name in the LCD display.

CO3: Perform LED blinking and LED pattern creation with push button control with Arduino.

CO4: Perform IR sensor interfacing, ultrasonic sensor interfacing and soil moisture interfacing with ESP32.

CO5: Design a system that integrates ultrasonic sensors for accurate distance measurement.

Pre-requisites:

Applied Physics

1020235543	**Industrial IoT**	L	T	P	C
PRACTICUM		1	0	4	3

CO/PO Mapping

CO / PO	PO1	PO2	PO3	PO4	PO5	PO6	PO7
CO1	3	-	1	3	-	-	-
CO2	3	-	1	3	-	-	-
CO3	3	-	1	3	-	-	-
CO4	3	-	1	3	-	-	-
CO5	3	-	1	3	-	-	-

Legend: 3-High Correlation, 2-Medium Correlation, 1-Low Correlation

Instructional Strategy:

- It is advised that teachers take steps to increase the students' attention and boost their curiosity to learn.
- Implement task-based learning activities where students work on specific tasks or projects.
- Incorporate technology tools and resources, such as online platforms, interactive multimedia, and virtual communication tools, to enhance engagement and provide additional practice opportunities.
- Incorporate formative and summative assessments to measure student progress and provide targeted feedback.
- Throughout the course, a theory-demonstrate-practice-activity strategy may be used to ensure that learning is outcome and employability based.
- All demonstrations/Hand-on practices may be followed in the real environment as far as possible.

1020235543	**Industrial IoT**	L	T	P	C
PRACTICUM		1	0	4	3

Assessment Methodology:

	Continuous Assessment (40 marks)				**End Semester Examination (60 marks)**
	CA1	**CA2**	**CA3**	**CA4**	
Mode	Practical Test	Practical Test	Written Test Theory	Practical Test	Practical Examination
Portion	Cycle I Exercises	Cycle II Exercises	All Portions	All Exercises	All Exercises Experiments
Duration	2 Periods	2 Periods	3 Hours	3 Hours	3 hours
Exam Marks	60	60	100	100	100
Converted to Marks	10	10	15	15	60
Marks	10		15	15	60
Tentative Schedule	7th Week	14th Week	15th Week	16th Week	

Note:

- **CA1 and CA2:** All the exercises/experiments should be completed as per the portions above and kept for the practical test. The students shall be permitted to select any one by lot for the test. The practical test should be conducted as per the scheme of evaluation as below. The marks awarded shall be converted to 10 Marks for each assessment test. Best of one will be considered for the internal assessment of 10 Marks.

  Practical documents should be maintained for every experiment immediately after completion of the practice. The practical document should be submitted for the practical test. The same should be evaluated for 10 Marks for each exercise/experiment. The total

marks awarded should be converted to 10 Marks for the practical test as per the scheme of evaluation as below.

The details of the documents to be prepared as per the instruction below.

Each experiment should be completed on the day of practice. The same shall be evaluated for 10 marks on the day or next day of practice before commencement of the next experiment.

This documentation can be carried out in a separate notebook / printed manual / file. The Program, Procedure, Sketch and Output should be written by the student manually. The detailed date of the practices and its evaluations should be maintained in the course logbook. The log book and the practical documents should be submitted for the verification by the Flying Squad and DOTE Official.

SCHEME OF EVALUATION

PART	DESCRIPTION	MARKS
A	Aim & Tools Required	10
B	Procedure / Steps	20
C	Execution	20
TOTAL		50
D	Practical Documents (As per the portions)	10
		60

Cycle I: 1, 2, 3 4, and 5.

Cycle II: 6, 7, 8, 9 and 10.

- **CA 3:** Written Test for complete theory portions should be conducted for 100 Marks as per the question pattern below. The marks scored will be converted to 15 Marks for internal assessment.

1020235543	Industrial IoT	L	T	P	C
PRACTICUM		1	0	4	3

Question pattern – Written Test Theory

Description		Marks	
Part – A	30 MCQ Questions.	30 X 1 Mark	30 Marks
Part – B	7 Questions to be answered out of 10 Questions.	7 X 10 Marks	70 Marks
TOTAL			100 Marks

- **CA 4:** All the exercises/experiments should be completed and kept for the practical test. The students shall be permitted to select any one by lot for the test. The practical test should be conducted as per the scheme of evaluation below. After completion of all the exercises the practical test should be conducted as per End Semester Examination question pattern scheme of evaluation. The marks awarded should be converted to 15 Marks for the internal assessment.

SCHEME OF EVALUATION

Model Practical Examination and End Semester Examination - Practical Exam

PART	DESCRIPTION	MARKS
A	Aim & Tools Required	10
B	Procedure / Steps	20
C	Execution	20
D	Output / Result	10
E	Written Test	30
F	Viva Voce	10
	TOTAL	100

Note: For the written test 30 MCQ shall be asked from the theory portions.

1020235543	**Industrial IoT**	L	T	P	C
PRACTICUM		1	0	4	3

Syllabus Contents

Theory Portion		
UNIT I: INTRODUCTION TO INDUSTRIAL IOT (IIOT) SYSTEMS		**Period**
The Various Industrial Revolutions, Role of Internet of Things (IoT) & Industrial Internet of Things (IIoT) in Industry, Industry 4.0 revolutions, Support System for Industry 4.0, Smart Factories.		7
UNIT II: IMPLEMENTATION SYSTEMS FOR IIOT		
Sensors and Actuators for Industrial Processes, Sensor networks, Process automation and Data Acquisitions on IoT Platform, Microcontrollers and Embedded PC roles in IIoT, Wireless Sensor nodes with Bluetooth, WiFi, and LoRa Protocols and IoT Hub systems.		8
Practical Exercises:		
1	To implement LED Blink and LED pattern with Arduino	5
2	Creating different LED patterns and controlling with push button switches.	5
3	Automated LED light control based on input from IR sensor and LDR	5
4	To display your name in a LCD 16 x2 display with Arduino.	5
5	Controlling servo motors with the help of joystick	5
6	Measurement of temperature and Pressure using ESP32	5
7	Calculate the distance to an object with the help of an Ultrasonic sensor and display it on a LCD	5
8	Design a system that integrates ultrasonic sensors for accurate distance measurement in the identified areas.	5
9	integrate sensors such as GPS, accelerometers, and panic Basic Burglar alert security system with the help of PIR sensor and Buzzer	5
10	Modules and sensor interfacing - Interfacing IR sensor and LED with ESP32	5
	Revision + Continuous Assessment	10
	Total Period	75

1020235543	Industrial IoT	L	T	P	C
PRACTICUM		1	0	4	3

Suggested List of Students Activity:

1. Each students to write and submit the assignment on the topic 'Contrast IT and OT'
2. Four students can be grouped as a batch and practice an additional experiment to interface any one of the Arduino compatible sensors with Arduino and observe the behaviour of sensors.
3. Introduction to Arduino platform and programming
4. Study on various sensors and actuators.

Text and Reference Books:

1. Sudip Misra, Anandarup Mukherjee, Arijit Roy, Introduction to IoT, First Edition, Cambridge University Press, 2022.
2. Alasdair Gil Christ, Industry 4.0: The Industrial Internet of Things, Apress, Publications, 2016.
3. Sudan Jha, Usman Tariq, Gyanendra Prasad Joshi, Vijender Kumar Solanki, Industrial Internet of Things: Technologies, Design, and Applications, CRC Press, 2022.

Web-based/Online Resources:

https://onlinecourses.nptel.ac.in/noc20_cs69/preview

Equipment / Facilities required to conduct the Practical Course.

S.No	Name of the Equipment's	Quantity Required
1.	Arduino UNO set	15
2.	ESP32 set -Type C	15
3.	LED Bulb	15
4.	Resistor	15
5.	Push button	15
6.	Servo motor 5V DC	15
7	DC motor	15
8	5V DC Relay	15

9	Mini Breadboard	15
10	16 X 2 LCD Display with TTL	15
11	Gas sensor MQ2	15
12	IR Sensor	15
13	Temperature sensor DHT11 module	15
14	Ultrasonic sensor HC-SR04	15
15	Joystick module	15
16	Jumper wires - 3 nos.	As Required

END SEMESTER EXAMINATIONS – PRACTICAL EXAM

Note:

All the exercises/experiments should be completed before the Board Practical Examinations. End Semester Practical examination should be conducted for all the exercises / experiments for 100 Marks. Students will be permitted to select any one exercise by lot or question paper supplied by the DOTE Exam section shall be used. The practical document prepared by the student should be submitted with a Bonafide Certificate.

SCHEME OF EVALUATION

PART	DESCRIPTION	MARKS
A	Aim & Tools Required	10
B	Procedure / Steps	20
C	Execution	20
D	Output / Result	10
E	Written Test	30
F	Viva Voce	10
	TOTAL	100

Note: For the written test 30 MCQ shall be asked from the theory portions.

1020235544	**Advanced Welding Technologies**	L	T	P	C
PRACTICUM		1	0	4	3

Introduction:

This syllabus outlines advanced welding technologies that covers various welding processes and techniques. The course is divided into 3 units that cover topics like introductory welding concepts, common arc and resistance welding processes, welding metallurgy, and weldment inspection and testing. The course aims to impart knowledge of advanced welding practices, welding process parameters, and the comparative merits of different welding methods. Students should learn to select the appropriate welding technique for various joint types and understand how to produce quality weldments.

Course Objectives:

1. To learn various concepts related to welding and its applications.
2. To have practical purview of various welding processes, welding standards, and advanced welding processes.
3. Familiarise with the working of the various welding processes.

Course Outcomes:

On successful completion of this course, the student will be able to

CO1: Explain the physics of Welding

CO2: Identify the appropriate Welding technique for the components

CO3: Select proper techniques to identify the welding defects

CO4: Acquire skills on advanced welding techniques

CO5: Demonstrate the necessary skills to identify the defects in welding.

Pre-requisites:

Knowledge of metal joining procedure

1020235544	**Advanced Welding Technologies**	L	T	P	C
PRACTICUM		1	0	4	3

CO/PO Mapping

CO / PO	PO1	PO2	PO3	PO4	PO5	PO6	PO7
CO1	3			3			
CO2	3			3			
CO3	3			3			
CO4	3			3			
CO5	3			3			

Legend: 3-High Correlation, 2-Medium Correlation, 1-Low Correlation

Instructional Strategy:

1. Engage and Motivate: Instructors should actively engage students to boost their learning confidence.
2. Real-World Relevance: Incorporate relatable, real-life examples and engineering applications to help students understand and appreciate course concepts.
3. Interactive Learning: Utilize demonstrations and plan interactive student activities for an engaging learning experience.
4. Application-Based Learning: Employ a theory-demonstrate-practice-activity strategy throughout the course to ensure outcome-driven learning and employability.
5. Simulation and Real-World Practice: Conduct demonstrations and hands-on activities in a simulated environment, transitioning to real-world scenarios when possible.
6. Encourage Critical Analysis: Foster an environment where students can honestly assess experiment outcomes and analyze potential sources of error in case of discrepancies

1020235544	**Advanced Welding Technologies**	L	T	P	C
PRACTICUM		1	0	4	3

Assessment Methodology:

	Continuous Assessment (40 marks)				**End Semester Examination (60 marks)**
	CA1	**CA2**	**CA3**	**CA4**	
Mode	Practical Test	Practical Test	Written Test Theory	Practical Test	Practical Examination
Portion	Cycle I Exercises	Cycle II Exercises	All Portions	All Exercises	All Exercises Experiments
Duration	2 Periods	2 Periods	3 Hours	3 Hours	3 hours
Exam Marks	60	60	100	100	100
Converted to Marks	10	10	15	15	60
Marks	10		15	15	60
Internal Marks	40				
Tentative Schedule	7th Week	14th Week	15th Week	16th Week	

Note:

- **CA1 and CA2:** All the exercises/experiments should be completed as per the portions above and kept for the practical test. The students shall be permitted to select any one by lot for the test. The practical test should be conducted as per the scheme of evaluation as below. The marks awarded shall be converted to 10 Marks for each assessment test. Best of one will be considered for the internal assessment of 10 Marks.

  Practical documents should be maintained for every experiment immediately after completion of the practice. The practical document should be submitted for the practical test. The same should be evaluated for 10 Marks for each exercise/experiment. The total

marks awarded should be converted to 10 Marks for the practical test as per the scheme of evaluation as below.

The details of the documents to be prepared as per the instruction below.

Each exercise should be completed on the day of practice.

The same shall be evaluated for 10 marks on the day or next day of practice before commencement of the next experiment.

This documentation can be carried out in a separate notebook / printed manual / file. The Steps, Procedure, Sketch and Result should be written by the student manually.

The detailed date of the practices and its evaluations should be maintained in the course logbook. The log book and the practical documents should be submitted for the verification by the Flying Squad and DOTE Official.

SCHEME OF EVALUATION

PART	DESCRIPTION	MARKS
A	Joint Preparation	20
B	Procedure	20
C	Weld bead	10
TOTAL		50
D	Practical Documents (As per the portions)	10
		60

Cycle - I **Exercise 1, 2, 3, 4, 5 and 6.**

Cycle - II **Exercise 7, 8, 9, 10, 11 and 12.**

- **CA 3:** Written Test for complete theory portions should be conducted for 100 Marks as per the question pattern below. The marks scored will be converted to 15 Marks for internal assessment.

1020235544	**Advanced Welding Technologies**	L	T	P	C
PRACTICUM		1	0	4	3

Question pattern – Written Test Theory

Description		**Marks**	
Part – A	30 MCQ Questions.	30 X 1 Mark	30 Marks
Part – B	7 Questions to be answered out of 10 Questions.	7 X 10 Marks	70 Marks
TOTAL			100 Marks

- **CA 4:** All the exercises/experiments should be completed and kept for the practical test. The students shall be permitted to select any one by lot for the test. The practical test should be conducted as per the scheme of evaluation below. After completion of all the exercises the practical test should be conducted as per End Semester Examination question pattern scheme of evaluation. The marks awarded should be converted to 15 Marks for the internal assessment.

SCHEME OF EVALUATION

Model Practical Examination and End Semester Examination - Practical Exam

PART	**DESCRIPTION**	**MARKS**
A	Joint Preparation	20
B	Procedure	20
C	Weld bead	10
D	Finish	10
E	Written Test	30
F	Viva Voce	10
	TOTAL	100

Note: For the written test 30 MCQ shall be asked from the theory portions.

1020235544	**Advanced Welding Technologies**	L	T	P	C
PRACTICUM		1	0	4	3

Syllabus contents

Theory Portion	Period
UNIT 1: Introduction and physics of welding Overview of welding processes and their classification, edge preparation, weld symbols – types of joints - weld nomenclature - electrode - codes – flux coating - modes of metal transfer – heat sources – types of welding arc - Arc characteristics - Voltage-current characteristics – welding efficiency - heat affected zone (HAZ) - welding techniques **UNIT 2: Arc, Gas and other welding processes** Fundamental principles - arc welding – carbon arc welding – shielded metal arc welding – submerged arc welding – TIG – MIG – plasma arc welding – electro slag welding - advantages, limitations and applications; Oxy-acetylene welding – air-acetylene welding – advantages, limitations and applications. LASER beam welding, robot welding, solid state welding - diffusion bonding, explosive welding, ultrasonic welding, friction welding, forge welding - thermit welding - atomic hydrogen welding - electron beam welding - under water welding - electric resistance welding, spot, seam – its advantages, disadvantages and applications. **UNIT 3: Welding defects and Inspection** Welding defects – causes and remedies – Weldability test - Weldability of metals like steels, stainless steels, aluminium, copper, nickel and titanium alloys – inspections – purpose – inspection methods – visual inspection - DPT – MPT – radiographic test – ultrasonic test – phased array ultrasonic test (PAUT) - case studies in testing of welded joints - Software in welding and importance.	15
Practice Arc welding basic exercises (for practice) : Lap joint, Butt joint, Corner joint, T-joint Gas welding basic exercises (for practice) : Lap joint, Butt joint, Corner joint, T-joint	10

1020235544	**Advanced Welding Technologies**	L	T	P	C
PRACTICUM		1	0	4	3

Practical Exercises	
Exercises for Practical Exam.: 1. Make a butt and fillet joints by down hand welding (single V) using arc welding. 2. Make a butt and fillet joints by vertical welding using arc welding. 3. Welding of pipes using arc welding 4. Butt welding of thin sheets leftward, rightward and downward using gas welding. 5. Welding of tubes using gas welding. 6. TIG welding practice – butt joint. 7. MIG welding practice – butt joint. 8. Spot welding practice in thin sheets. 9. Inspection of welding – visual and magnetic particle test. 10. Inspection of welding – die penetrant test and ultrasonic test.	40
Revision + Test	10
Total	75

Cycle - I **Exercise 1, 2, 3, 4, 5 and 6.**

Cycle - II **Exercise 7, 8, 9, 10, 11 and 12.**

Suggested List of Students Activity:

- Observe the welding machine in the institute and study its specifications. List the possibility of different method of weld joints that can be used.
- Study the type of current used in the welding machine and draw the circuit diagram.
- Study the types of electrode used and its industrial applications.

1020235544	**Advanced Welding Technologies**	L	T	P	C
PRACTICUM		1	0	4	3

Text and Reference Books:

1. Advance Welding Technology by S.A. Rizvi , S.K. Kataria & Sons. 4th, reprint 2019.
2. Welding Engineering and Technology by R.S. PARMAR, IIT, Delhi, Kanna Publishers, 1999.
3. Welding principles and practices by Edward R. Bohnart, Mc. Graw Hill Education, 2014.

WEB REFERENCE

- https://archive.nptel.ac.in/courses/112/103/112103263/#
- https://archive.nptel.ac.in/courses/112/103/112103244/
- https://archive.nptel.ac.in/courses/112/107/112107089/
- https://youtube.com/playlist?list=PLwdnzlV3ogoW9g44SFbiiCjyMOMPnNBL8&feature=shared

END SEMESTER EXAMINATIONS – PRACTICAL EXAM

Note:

All the exercises/experiments should be completed before the Board Practical Examinations. End Semester Practical examination should be conducted for all the exercises / experiments for 100 Marks. Students will be permitted to select any one exercise by lot or question paper supplied by the DOTE Exam section shall be used. The practical document prepared by the student should be submitted with a Bonafide Certificate.

SCHEME OF EVALUATION

PART	DESCRIPTION	MARKS
A	Joint Preparation	20
B	Procedure	20
C	Weld bead	10
D	Finish	10
E	Written Test (Theory Portions)	30
F	Viva Voce	10
	TOTAL	100

Note: For the written test 30 MCQ shall be asked from the theory portions.

1020235545	**Industrial Robotics**	L	T	P	C
PRACTICUM		1	0	4	3

Introduction

It has been realized that rapid industrialization and globalization needs industries to be more competitive and deliver cost effective quality products. This needs industries to implement flexible manufacturing systems where Robotic technology plays a major role. Hence study of robotic technology is very essential, To acquire knowledge about the hydraulic and pneumatic systems and its functions of the components. Understand the control methods of automation.

Course Objectives

The objective of this course is to prepare the student,

- To understand the basics of robot components and process automation.
- To execute the Robot programming using simulation software.
- To execute the Robot programming and Execute.
- To perform the basics of robotics and simulation of software fixtures for material handling and industrial applications.
- To execute program for various applications in manufacturing by using robot programming and industrial safety systems.
- To learn about the software and hardware systems for industrial Robotics

Course Outcomes

On successful completion of this course, the student will be able to,

CO1: Describe the components of Robot and its joints & links in Robot configuration,

CO2: Classify the robot controller Drives and grippers,

CO3: Explain industrial applications of robot in Manufacturing environment

CO4: Generate robot program for material handling applications

CO5: Execute / Simulate programs for various applications in manufacturing by using robot programming.

1020235545	**Industrial Robotics**	L	T	P	C
PRACTICUM		1	0	4	3

Pre-requisites

Knowledge of Basic Robot Engineering, Robot software, Robot programming .

CO/PO Mapping

CO / PO	PO1	PO2	PO3	PO4	PO5	PO6	PO7
CO1	3			2			1
CO2	3			2			1
CO3	3			2			1
CO4	3			2			1
CO5	3			2			1

Legend: 3-High Correlation, 2-Medium Correlation, 1-Low Correlation

Instructional Strategy

Active Learning: Activities for active learning can include think-pair-share strategies as well as kin-esthetic learning environment.Teachers can start a discussion to make sure students take ownership over their own participation and talk through new ideas and skills with peers. Teachers guide students as they construct their own knowledge and understanding.

Hands-on-Training: Conduct demonstrations and hands on training is all about applying the knowledge you have learned in training into practice.

Real time Learning: Instructors encourage the students to implement the techniques in their own place / Lab through the Industry-Institute interactions.

1020235545	**Industrial Robotics**	L	T	P	C
PRACTICUM		1	0	4	3

Assessment Methodology:

	Continuous Assessment (40 marks)				**End Semester Examination (60 marks)**
	CA1	**CA2**	**CA3**	**CA4**	
Mode	Practical Test	Practical Test	Written Test Theory	Practical Test	Practical Examination
Portion	Cycle I Exercises	Cycle II Exercises	All Portions	All Exercises	All Exercises Experiments
Duration	2 Periods	2 Periods	3 Hours	3 Hours	3 hours
Exam Marks	60	60	100	100	100
Converted to Marks	10	10	15	15	60
Marks	10		15	15	60
Internal Marks	40				
Tentative Schedule	7th Week	14th Week	15th Week	16th Week	

Note:

- **CA1 and CA2:** All the exercises/experiments should be completed as per the portions above and kept for the practical test. The students shall be permitted to select any one by lot for the test. The practical test should be conducted as per the scheme of evaluation as below. The marks awarded shall be converted to 10 Marks for each assessment test. Best of one will be considered for the internal assessment of 10 Marks.

  Practical documents should be maintained for every experiment immediately after completion of the practice. The practical document should be submitted for the practical test. The same should be evaluated for 10 Marks for each exercise/experiment. The total

marks awarded should be converted to 10 Marks for the practical test as per the scheme of evaluation as below.

The details of the documents to be prepared as per the instruction below.

Each exercise should be completed on the day of practice. The same shall be evaluated for 10 marks on the day or next day of practice before commencement of the next experiment.

This documentation can be carried out in a separate notebook / printed manual / file. The Steps, Procedure, Sketch and Result should be written by the student manually. The detailed date of the practices and its evaluations should be maintained in the course logbook. The log book and the practical documents should be submitted for the verification by the Flying Squad and DOTE Official.

SCHEME OF EVALUATION

PART	DESCRIPTION	MARKS
A	Step / Procedure	10
B	Write Program	20
C	Edit Program / Simulate / Execution	20
TOTAL		50
D	Practical Documents (As per the portions)	10
		60

Cycle - I **Exercise 1, 2, 3, 4 and 5.**

Cycle - II **Exercise 6, 7, 8, 9, 10 and 11.**

- **CA 3:** Written Test for complete theory portions should be conducted for 100 Marks as per the question pattern below. The marks scored will be converted to 15 Marks for internal assessment.

Question pattern – Written Test Theory

1020235545	**Industrial Robotics**	L	T	P	C
PRACTICUM		1	0	4	3

Description		**Marks**	
Part – A	30 MCQ Questions.	30 X 1 Mark	30 Marks
Part – B	7 Questions to be answered out of 10 Questions.	7 X 10 Marks	70 Marks
TOTAL			100 Marks

- **CA 4:** All the exercises/experiments should be completed and kept for the practical test. The students shall be permitted to select any one by lot for the test. The practical test should be conducted as per the scheme of evaluation below. After completion of all the exercises the practical test should be conducted as per End Semester Examination question pattern scheme of evaluation. The marks awarded should be converted to 15 Marks for the internal assessment.

SCHEME OF EVALUATION

Model Practical Examination - Practical Exam

PART	**DESCRIPTION**	**MARKS**
A	Step / Procedure	10
B	Write Program	20
C	Edit Program / Simulate / Execution	20
D	Result / Finish / Accuracy	10
E	Written Test	30
F	Viva Voce	10
	TOTAL	100

Note: For the written test 30 MCQ shall be asked from the theory portions.

1020235545	**Industrial Robotics**	L	T	P	C
PRACTICUM		1	0	4	3

Syllabus contents

THEORY	
Introduction – Definitions of Robot -Robot Anatomy – Basic configuration of Robotics – Robot Components – Manipulator, End effecter, Driving system, Controller and Sensors. Mechanical arm – Degrees of freedom – Links and joints – Types of joints – Joint notation scheme – Pitch, Yaw, Roll – Classification of robots – Work envelope, Work Volume. Robot controller – Configuration - Four types of controls – Open loop and closed loop controls – Speed of response and stability – Precision of movements: Spatial resolutions, accuracy and repeatability. Pneumatic drives – Hydraulic drives – Mechanical drives – Electrical drives –Stepper motors, DC Servo motors and AC Servo motors – Salient features – Applications and Comparisons of Drives. End effecters –Grippers – Mechanical Grippers, Magnetic Grippers, Vacuum Grippers, Two fingered and Three fingered Grippers, Internal and External Grippers, – End Of Arm Tooling (EOAT)- Selection and Design considerations Robot applications – Material handling – Press loading and unloading –Die casting – Machine tool loading and unloading – Spot welding – Arc welding – Spray painting – Assembling – Finishing – Automatic Guided Vehicle – Adopting robots to workstations – Requisite robot characteristics and Non requisite robot characteristics – Stages in selecting robots for industrial applications – Safety considerations for robot operations – Robotics in the future and characteristics task–Economical analysis of robots – Social implications.	15
Practice Study of Robot system, Study and practice in the robot simulation software .	6

1020235545	Industrial Robotics	L	T	P	C
PRACTICUM		1	0	4	3

Practical Exercise

Ex.No	Name of the Experiment	
1.	Programming using Position recording using Cartesian co-ordinate system - (No. of positions – 9).	4
2.	Programming using Position recording using Polar co-ordinate system - (No. of positions - 9).	4
3.	Programming using Loops and sub – routine.	4
4.	Pick and place of objects (No. of objects to be specified- 6).	4
5.	Pick and stack of objects (No. of objects to be specified- 6).	4
6.	Arc welding practice(Length. of weld to be specified).	4
7.	Programming using Spot welding practice - (No. of spots Minimum 3).	4
8.	Assembling practice (Simple assembling).	4
9.	Profile cutting practice (combination of lines and arcs).	4
10.	Programming for Spray painting practice - (Area - 300mm x 300mm).	4
11.	Programming using Machine loading and unloading practice with time delay.	4
Revision + Assessment		10
Total		75

Textbook:

1. Mikell P Groover, Mitchell Weiss, Roger N Nagel, Nicholas Odrey, and Ashish Dutta, Industrial Robotics – Technology, Programming and Applications, 2nd Edition, McGraw Hill, 2013.
2. Appuu Kuttan, Robotics, I.K. International Publishing House Pvt. Limited, 2013
3. Ganesh S. Hegde, A Textbook of Industrial Robotics, Second Edition, Laxmi Publications (P) Ltd., 2015
4. Nagarajan Ramachandran, Introduction to Industrial Robotics, Pearson India Education Services Pvt. Ltd., 2016

1020235545	Industrial Robotics	L	T	P	C
PRACTICUM		1	0	4	3

Website links for reference:

- https://www.youtube.com/playlist?list=PLyqSpQzTE6M_XM9cvjLLO_Azt1FkgPhpH
- https://www.youtube.com/playlist?list=PLFW6lRTa1g81AGUOky_xVhNVsudGwZxsY

LIST OF EQUIPMENTS

1. Robot simulation software or Robotic arm
2. Computer - 30 Nos.

END SEMESTER EXAMINATIONS – PRACTICAL EXAM

Note:

All the exercises/experiments should be completed before the Board Practical Examinations. End Semester Practical examination should be conducted for all the exercises / experiments for 100 Marks. Students will be permitted to select any one exercise by lot or question paper supplied by the DOTE Exam section shall be used. The practical document prepared by the student should be submitted with a Bonafide Certificate.

SCHEME OF EVALUATION

PART	DESCRIPTION	MARKS
A	Step / Procedure	10
B	Write Program	20
C	Edit Program / Simulate / Execution	20
D	Result / Finish / Accuracy	10
E	Written Test (Theory Portions)	30
F	Viva Voce	10
	TOTAL	100

Note: For the written test 30 MCQ shall be asked from the theory portions.

1020235546	HVAC Systems and Components	L	T	P	C
PRACTICUM		1	0	4	3

Introduction:

To impart knowledge about HVAC system components, handling the components and testing the performance is very much needed. This content would be useful to select the various types of components to be used in HVAC systems with different capacities. The knowledge about VFD compressors and capacity calculation of cooling coils is very essential in the present scenario.

Course Objectives:

The objective of this course is to enable the student to

- Practice, set and adjust the LP and HP cut-out, TEV and thermostat in refrigeration systems.
- Test the capacitor and selector switch for its working.
- Test the pumping capacity of sealed compressor.
- Determine the capacity of fan and evaporator coil of window air conditioner.
- Determine the capacity of air cooled condenser of split air conditioner.
- Determine the range, approach and efficiency of cooling tower.

Course Outcomes

After successful completion of this course, the students should be able to,

CO1: Explain the construction and working of compressor and condenser.

CO2: Explain the functions of expansion valve and evaporator.

CO3: Describe the different components in the HVAC system.

CO4: Demonstrate the various processes of HVAC system.

CO5: Demonstrate the electrical components used in HVAC system.

Pre-requisites:

Basic knowledge of HVAC Components.

1020235546	HVAC Systems and Components	L	T	P	C
PRACTICUM		1	0	4	3

CO/PO Mapping

CO / PO	PO1	PO2	PO3	PO4	PO5	PO6	PO7
CO1	3			3			
CO2	3			3			
CO3	3			3			
CO4	3			3			
CO5	3			3			

Legend: 3-High Correlation, 2-Medium Correlation, 1-Low Correlation

Instructional Strategy:

- It is advised that teachers take steps to pique pupils' attention and boost their learning confidence.
- To help students learn and appreciate numerous concepts and principles in each area, teachers should provide examples from daily life, realistic situations, and real-world engineering and technological applications.
- The demonstration can make the subject exciting and foster in the students a scientific mindset. Student activities should be planned on all the topics.
- Throughout the course, a theory-demonstrate-practice-activity strategy may be used to ensure that learning is outcome and employability based.
- All demonstrations/Hand-on practices are under a simulated environment (may be followed by a real environment as far as possible).

1020235546	HVAC Systems and Components	L	T	P	C
PRACTICUM		1	0	4	3

Assessment Methodology:

	Continuous Assessment (40 marks)				End Semester Examination (60 marks)
	CA1	**CA2**	**CA3**	**CA4**	
Mode	Practical Test	Practical Test	Written Test Theory	Practical Test	Practical Examination
Portion	Cycle I Exercises	Cycle II Exercises	All Portions	All Exercises	All Exercises Experiments
Duration	2 Periods	2 Periods	3 Hours	3 Hours	3 hours
Exam Marks	60	60	100	100	100
Converted to Marks	10	10	15	15	60
Marks	10		15	15	60
Tentative Schedule	7th Week	14th Week	15th Week	16th Week	

Note:

CA1 and CA2: All the exercises/experiments should be completed as per the portions above and kept for the practical test. The students shall be permitted to select any one by lot for the test. The practical test should be conducted as per the scheme of evaluation as below. The marks awarded shall be converted to 10 Marks for each assessment test. Best of one will be considered for the internal assessment of 10 Marks.

Practical documents should be maintained for every experiment immediately after completion of the practice. The practical document should be submitted for the practical test. The same should be evaluated for 10 Marks for each exercise/experiment. The total marks awarded should be converted to 10 Marks for the practical test as per the scheme of evaluation as below.

1020235546	HVAC Systems and Components	L	T	P	C
PRACTICUM		1	0	4	3

The details of the documents to be prepared as per the instruction below.

Each exercise should be completed on the day of practice.

The same shall be evaluated for 10 marks on the day or next day of practice before commencement of the next experiment.

This documentation can be carried out in a separate notebook / printed manual / file. The Steps, Procedure, Sketch and Result should be written by the student manually.

The detailed date of the practices and its evaluations should be maintained in the course logbook. The log book and the practical documents should be submitted for the verification by the Flying Squad and DOTE Official.

SCHEME OF EVALUATION

PART	DESCRIPTION	MARKS
A	Aim / Procedure	10
B	Tools required / Observation	20
C	Diagrams / Tabulation and calculation / Setting / Adjusting	20
TOTAL		50
D	Practical Documents (As per the portions)	10
		60

Cycle - I **Exercise 1, 2, 3, 4, 5 and 6.**

Cycle - II **Exercise 7, 8, 9, 10, 11 and 12.**

CA 3: Written Test for complete theory portions should be conducted for 100 Marks as per the question pattern below. The marks scored will be converted to 15 Marks for internal assessment.

1020235546	HVAC Systems and Components	L	T	P	C
PRACTICUM		1	0	4	3

Question pattern – Written Test Theory

Description		Marks	
Part – A	30 MCQ Questions.	30 X 1 Mark	30 Marks
Part – B	7 Questions to be answered out of 10 Questions.	7 X 10 Marks	70 Marks
TOTAL			100 Marks

CA 4: All the exercises/experiments should be completed and kept for the practical test. The students shall be permitted to select any one by lot for the test. The practical test should be conducted as per the scheme of evaluation below. After completion of all the exercises the practical test should be conducted as per End Semester Examination question pattern scheme of evaluation. The marks awarded should be converted to 15 Marks for the internal assessment.

SCHEME OF EVALUATION

Model Practical Examination - Practical Exam

PART	DESCRIPTION	MARKS
A	Aim / Procedure	10
B	Tools required / Observation	20
C	Diagrams / Tabulation and calculation / Setting / Adjusting	20
D	Result / Report	10
E	Written Test	30
F	Viva Voce	10
	TOTAL	100

Note: For the written test 30 MCQ shall be asked from the theory portions.

Syllabus Contents

Unit 1	**Compressor**
Compressor – Introduction - functions of a compressor – Classification - open type reciprocating compressor – Hermetically sealed compressors – construction and working	3

1020235546	HVAC Systems and Components	L	T	P	C
PRACTICUM		1	0	4	3

Unit II	**Condenser**
Condenser - Introduction – Functions ––Classification of condensers – Air cooled condenser, Water cooled condenser - Construction and Working	3
Unit III	**Expansion device**
3.1 Expansion devices- Introduction – Functions – Types of expansion devices –Capillary tube, Automatic expansion valve, Thermostatic expansion valve – Construction and working only.	3
Unit IV	**Evaporator**
Evaporator - Introduction – Functions - Types of evaporators – Bare tube coil evaporators- Finned evaporators – Construction and working only.	3
Unit V	**HVAC System Controls and Fans**
5.1 Motor Operating Components: Selector switch – OLP – Relay – Capacitor – Starting, Running. System Controls: LP, HP cutout –– Humidity control – Thermostat switch – Solenoid valve. **5.2** Fans – Introduction - function of fans - Types of fans - centrifugal fans - Axial flow fan – Propeller fan, Tube axial fan and vane axial fan – Construction and working only.	3

Practical Exercise

Ex. No	Name of the Exercise	Periods
1	Charging of Refrigerant in a refrigeration System	4
2	Pump down of refrigerant from the refrigeration System	4
3	Find out the leak in the refrigeration System and rectify the defect	4
4	Charging of oil in the refrigeration System	4
5	Setting and Adjusting the thermostat.	4
6	Setting and Adjusting of low pressure and High pressure cut out in VCR system.	4

1020235546	HVAC Systems and Components	L	T	P	C
PRACTICUM		1	0	4	3

7	Setting and Adjusting of thermostatic expansion valve.	4
8	Testing the pumping capacity of a sealed compressor.	4
9	Testing and Replacement of faulty capacitor and selector switch.	4
10	Determination of capacity of fan.	4
11	Determination of capacity of evaporator coil of window / Split Air conditioner	4
12	Determination of capacity of air cooled condenser of a Window / Split Air conditioner	4
Revision + Test		12
Total		75

Suggested List of Students Activity:

1. Prepare/Download a specification of the following:
2. Various tools, Equipments and controls used in HVAC systems
3. Presentation / seminar by students on HVAC systems

TEXT BOOKS and REFERENCES

1. ASHRAE Hand Book Heating, ventilating and Air-conditioning systems and equipment.
2. The Institute of Plumbing - Plumbing Engineering Services Design Guide.
3. Principles of Electrical and Engineering and Electronics by V.K.Mehta and Rohit Mehta.

Web-based/Online Resources:

- https://youtu.be/IKn3c7Sup9k?si=eWDXDgmNGB-RnGs7
- https://youtu.be/PjcdqAkP0UA?si=Ik-us0HFvDgver4M
- https://youtu.be/QgVnRsdoxwQ?si=uf3JHI_hqwK2nkRR
- https://youtu.be/6YiCjnjLKH8?si=SSc125M7ZlDARi9t

1020235546	HVAC Systems and Components	L	T	P	C
PRACTICUM		1	0	4	3

END SEMESTER EXAMINATIONS – PRACTICAL EXAM

Note:

All the exercises/experiments should be completed before the Board Practical Examinations. End Semester Practical examination should be conducted for all the exercises / experiments for 100 Marks. Students will be permitted to select any one exercise by lot or question paper supplied by the DOTE Exam section shall be used. The practical document prepared by the student should be submitted with a Bonafide Certificate.

SCHEME OF EVALUATION

PART	DESCRIPTION	MARKS
A	Aim / Procedure	10
B	Tools required / Observation	20
C	Diagrams / Tabulation and calculation / Setting / Adjusting	20
D	Result / Report	10
E	Written Test	30
F	Viva Voce	10
	TOTAL	100

Note: For the written test 30 MCQ shall be asked from the theory portions.

Equipment / Facilities required to conduct the Practical Course.

Sl.No	Equipments	Nos
01	VCR experimental setup with thermostat, LP HP cutouts and TEV	1
02	Sealed compressor and gauge manifold set	1
03	Experimental setup for testing capacitor and selector switch	1
04	Experimental setup for determining capacity of fan and anemometer	1
05	Window air conditioner experimental setup for finding the capacity of evaporator	1
06	Split air conditioner experimental setup for finding the capacity of air cooled condenser	1
07	Cooling tower experimental setup	1

1020235547	**Automobile Technology**	L	T	P	C
PRACTICUM		1	0	4	3

Introduction:

Automobiles are one of the key areas of development in India facilitated by Multinational Companies. As automobiles are the Major sources of employing man power a thorough knowledge on Automobile Engine construction and its functioning is required with due consideration on pollution control.

Course Objectives:

- Explain about the constructional details of an Automobile engine including cooling and lubrication system.
- Describe fuel feed systems for petrol and diesel engines with all devices involved in it.
- Explain the construction and functional features of the power transmission systems and various parts involved in it.
- Explain the functions of different types of steering, suspension and brake systems.
- Describe the different types of chassis and their functions.
- Familiarize electrical and electronic equipment used in automobiles.
- To understand the emerging trends of electric vehicles, hybrid electric vehicles and solar vehicles.
- To know the automobile emissions and its effects on the environment.

Course Outcomes

On successful completion of this course, the student will be able to

CO1: Explain the principles of cooling and lubrication systems for an IC engine

CO2: Describe fuel feed systems for petrol and diesel engines with all its components.

CO3:Illustrate the types of steering, suspension and brake systems based on the functions

CO4: Classify the types of Automobile Chassis and its sub systems based on their applications.

CO5: Explore the various Electrical Equipments used in an automobile system

Pre-requisites:

Basic knowledge about internal combustion engines.

1020235547	**Automobile Technology**	L	T	P	C
PRACTICUM		1	0	4	3

CO/PO Mapping

CO / PO	PO1	PO2	PO3	PO4	PO5	PO6	PO7
CO1	3	-	-	3	-	-	1
CO2	3	-	-	3	-	-	1
CO3	3	-	-	3	-	-	0
CO4	3	-	-	3	-	-	1
CO5	3			3	-	-	1

Legend: 3-High Correlation, 2-Medium Correlation, 1-Low Correlation

Instructional Strategy:

- Engage and Motivate: Instructors should actively engage students to boost their learning confidence.
- Real-World Relevance: Incorporate relatable, real-life examples and engineering applications to help students understand and appreciate course concepts.
- Interactive Learning: Utilize demonstrations and plan interactive student activities for an engaging learning experience.
- Application-Based Learning: Employ a theory-demonstrate-practice-activity strategy throughout the course to ensure outcome-driven learning and employability.
- Simulation and Real-World Practice: Conduct demonstrations and hands-on activities in a simulated environment, transitioning to real-world scenarios when possible.
- Encourage Critical Analysis: Foster an environment where students can honestly assess experiment outcomes and analyse potential sources of error in case of discrepancies

1020235547	**Automobile Technology**	L	T	P	C
PRACTICUM		1	0	4	3

Assessment Methodology:

	Continuous Assessment (40 marks)				**End Semester Examination (60 marks)**
	CA1	**CA2**	**CA3**	**CA4**	
Mode	Practical Test	Practical Test	Written Test Theory	Practical Test	Practical Examination
Portion	Cycle I Exercises	Cycle II Exercises	All Portions	All Exercises	All Exercises Experiments
Duration	2 Periods	2 Periods	3 Hours	3 Hours	3 hours
Exam Marks	60	60	100	100	100
Converted to Marks	10	10	15	15	60
Marks	10		15	15	60
Internal Marks	40				
Tentative Schedule	7th Week	14th Week	15th Week	16th Week	

Note:

- **CA1 and CA2:** All the exercises/experiments should be completed as per the portions above and kept for the practical test. The students shall be permitted to select any one by lot for the test. The practical test should be conducted as per the scheme of evaluation as below. The marks awarded shall be converted to 10 Marks for each assessment test. Best of one will be considered for the internal assessment of 10 Marks.

  Practical documents should be maintained for every experiment immediately after completion of the practice. The practical document should be submitted for the practical test. The same should be evaluated for 10 Marks for each exercise/experiment. The total

marks awarded should be converted to 10 Marks for the practical test as per the scheme of evaluation as below.

The details of the documents to be prepared as per the instruction below.

Each exercise should be completed on the day of practice.

The same shall be evaluated for 10 marks on the day or next day of practice before commencement of the next experiment.

This documentation can be carried out in a separate notebook / printed manual / file. The Steps, Procedure, Sketch and Result should be written by the student manually.

The detailed date of the practices and its evaluations should be maintained in the course logbook. The log book and the practical documents should be submitted for the verification by the Flying Squad and DOTE Official.

SCHEME OF EVALUATION

PART	DESCRIPTION	MARKS
A	Procedure / Sketch / Setting / Tool Handling	20
B	Alignment test / Dismantling / Assembling	20
C	Troubles / Report / Test Chart	10
TOTAL		50
D	Practical Documents (As per the portions)	10
		60

Cycle - I **Exercise 1, 2, 3, 4, 5 and 6.**

Cycle - II **Exercise 7, 8, 9, 10, 11 and 12.**

- **CA 3:** Written Test for complete theory portions should be conducted for 100 Marks as per the question pattern below. The marks scored will be converted to 15 Marks for internal assessment.

1020235547	**Automobile Technology**	L	T	P	C
PRACTICUM		1	0	4	3

Question pattern – Written Test Theory

Description		**Marks**	
Part – A	30 MCQ Questions.	30 X 1 Mark	30 Marks
Part – B	7 Questions to be answered out of 10 Questions.	7 X 10 Marks	70 Marks
TOTAL			100 Marks

- **CA 4:** All the exercises/experiments should be completed and kept for the practical test. The students shall be permitted to select any one by lot for the test. The practical test should be conducted as per the scheme of evaluation below. After completion of all the exercises the practical test should be conducted as per End Semester Examination question pattern scheme of evaluation. The marks awarded should be converted to 15 Marks for the internal assessment.

SCHEME OF EVALUATION

Model Practical Examination - Practical Exam

PART	**DESCRIPTION**	**MARKS**
A	Aim & Tools required	10
B	Procedure / Sketch / Setting / Tool Handling	20
C	Alignment test / Dismantling / Assembling	20
D	Troubles / Report / Test Chart	10
E	Written Test	30
F	Viva Voce	10
	TOTAL	100

Note: For the written test 30 MCQ shall be asked from the theory portions.

1020235547	**Automobile Technology**	L	T	P	C
PRACTICUM		1	0	4	3

Syllabus Contents

Theory Portion - Unit I	
Automobile Engines Basic Engine Components and its functions, Cooling systems – purpose – types. Lubrication systems – purpose.	2
Practical Exercises **Exercise 1:** Dismantling and assembling a four stroke petrol engine and identification of parts. **Exercise 2:** Removing camshaft, replacing timing gears, removing valves, lapping and adjusting valve clearance.	8
Theory Portion - Unit II	
Types of fuel feed systems- S.U. Electrical fuel pump - petrol injection. Layout of diesel and petrol fuel feed system CRDI system - fuel injectors	2
Practical Exercises **Exercise 3:** Removing, servicing and replacing of fuel pump, oil pump & water pump. **Exercise 4:** Removing, servicing & replacing MPFI system. **Exercise 5:** Dismantling and assembling of inline fuel injection pump / CRDI system.	12
Theory Portion - Unit III	
Transmission And Power Trains General arrangement of power transmission system -clutch – function – Components – Types - Single plate and multi plate – Clutch troubles and their causes. Gear box – purpose–constant mesh and synchromesh-gear box troubles and their causes. Drive line – propeller shaft – Universal joint – . Differential – purpose – Construction and operation	4
Practical Exercises **Exercise 6:** Removing and replacing of pressure plate and clutch plate, fingers adjustment	8

1020235547	**Automobile Technology**	L	T	P	C
PRACTICUM		1	0	4	3

Exercise 7: Dismantling, inspecting and assembling of constant mesh gear box and find out the gear ratios.	
Theory Portion - Unit IV	
Automobile Chassis Front axle – Types– Steering gears. Suspension system – Functions – Type of springs Brake system – functions – ABS.	3
Practical Exercises **Exercise 8:** Dismantling, assembling and adjusting of steering gear box.	4
Theory Portion - Unit V	
Electrical Equipment & Hybrid Electric Vehicles Battery – lead acid battery – Nickel alkaline battery – construction and operation of starter motor. Ignition system – Types – High tension magneto – electronic ignition – Ignition system troubles and remedies. Lighting system - Horn circuits – Wind screen wiper.	4
Practical Exercises **Exercise 9:** Test a battery with specific gravity test and charge the battery with constant amperage / voltage method. **Exercise 10:** Dismantling, overhauling and assembling of starter motor / alternator **Exercise 11:** Trace the automobile electrical system with respect to battery coil ignition system **Exercise 12:** Trace the automobile electrical system with respect to (i) horn relay circuit, (ii) Wiper circuit & explain with neat circuit diagram	16
Assessment Test + Revision	12
Total	75

TEXT BOOKS & REFERENCES

1. A Textbook of Automobile Engineering by R.K.Rajput, Second Edition 2016, Laxmi Publications.
2. Automotive Mechanics, William H.crouse and Donald .L. Anglin, Tata McGraw– Hill Publishing CompanyLtd, NewDelhi.
3. Automotive Mechanics, Joseph Heitner, East–west Press (P) Ltd, NewDelhi

1020235547	Automobile Technology	L	T	P	C
PRACTICUM		1	0	4	3

END SEMESTER EXAMINATIONS – PRACTICAL EXAM

Note:

All the exercises/experiments should be completed before the Board Practical Examinations. End Semester Practical examination should be conducted for all the exercises / experiments for 100 Marks. Students will be permitted to select any one exercise by lot or question paper supplied by the DOTE Exam section shall be used. The practical document prepared by the student should be submitted with a Bonafide Certificate.

SCHEME OF EVALUATION

PART	DESCRIPTION	MARKS
A	Aim & Tools required	10
B	Procedure / Sketch / Setting / Tool Handling	20
C	Alignment Test / Dismantling / Assembling	20
D	Troubles / Report / Test Chart	10
E	Written Test	30
F	Viva Voce	10
	TOTAL	100

Note: For the written test 30 MCQ shall be asked from the theory portions.

Equipment / Facilities required to conduct the Practical Course.

1. Automobile Mechanic's tools-Complete Set
2. Internal circlip plier, bearing puller
3. Feeler gauge to check valve clearance, hammer and accessories
4. Compressor to supply high pressure air to clean oil and water filters.
5. 4 stroke petrol engine - with all accessories
6. 4 stroke Diesel engine - with all accessories
7. Engine cylinder with liner and cylinder bore dial gauge
8. Oil pump and water pump.
9. MPFI and CRDI kit
10. Inline Fuel Injection Pump and Injectors
11. Clutch set arrangement with tools
12. Complete gear box with tools
13. Complete steering arrangement
14. Battery and charging set up.
15. Measuring instruments
16. Consumables - Sufficient quantity.

1020235654	**Innovation & Startup**	L	T	P	C
PRACTICUM		1	0	2	2

Introduction

The integration of Innovation and Start-ups concept within the syllabus is testament to the forward thinking nature of educational institutions. By introducing this concept, students are provided with a solid foundation upon which they can build their skills in Innovation and Start-ups. This course can bridge the gap between theory and practice. It allows students to apply the knowledge they have acquired in a real world context, thereby enhancing their understanding and retention of the above concept. This experimental learning approach not only fosters a deeper level of engagement but also trains student with practical skills necessary to navigate the complexities of the business world. This also empowers students to become an Innovator or Entrepreneur. With necessary tools and knowledge, educational institutions are preparing the next generation of entrepreneurs to tackle the challenges and opportunities that lie ahead. This syllabus will explore the different facets of innovation, including its importance, types and strategies for fostering a culture of innovation within organizations

Course Objectives

The objective of this course is to enable the students

- To understand the concept of Innovation and Start-ups.
- To acquire knowledge of Prototype development, IPR, Patents and Copyrights.
- To have practical experience in preparing Business plan for Start-ups.
- To visit the existing nearby industry to prepare a project report about the present challenges of that industry.
- To know the different funding supports available from Government and Non-Government schemes for Start-ups.

1020235654	**Innovation & Startup**	L	T	P	C
PRACTICUM		1	0	2	2

Course Outcomes

After successful completion of this course, the students should be able to

CO 1: Differentiate between Innovation and Start-ups

CO 2: Explain the importance of IPR, Patents and Copyrights.

CO 3: Describe the methodology to be adopted for preparing the Business Plan

CO 4: Gain practical experience by Industrial training and visiting the nearby industry

Co 5: Explore and identify various funding facilities available from Government and Non-Government Schemes for Start-ups

Pre-requisites:

There are no specific prerequisites for this course, although a basic understanding of business and technology concepts would be beneficial.

CO/PO Mapping

CO / PO	PO1	PO2	PO3	PO4	PO5	PO6	PO7
CO1	-	-	1	-	2	3	3
CO2	-	-	1	-	2	3	3
CO3	-	-	1	-	2	3	3
CO4	-	-	1	-	2	3	3
CO5	-	-	1	-	2	3	3

Legend: 3-High Correlation, 2-Medium Correlation, 1-Low Correlation

1020235654	**Innovation & Startup**	L	T	P	C
PRACTICUM		1	0	2	2

Assessment Methodology

	Continuous Assessment (40 marks)			**End Semester Examination (60 marks)**
	CA1	**CA2**	**CA3**	
Mode	Class Assessment (Unit I, II & Unit III)	Seminar Presentations (Unit IV)	Submission of Industry Visit Project Report (Unit V)	Practical Examination (Project)
Duration	2 hours	---	---	3 hours
Exam Marks	50	20	30	100
Converted to	10	10	20	60
Marks	**10**	**10**	**20**	**60**

Continuous Assessment - 40 marks

S. No	**Description**	**Marks**
CA 1	**Class Assessment (50 marks) - Unit – I,II & III** Written Examination - Theory Questions 10 questions out of 15 questions (10 x 3 marks :30 marks) 4 questions out of 6 questions (4 x 5 marks : 20 marks)	10 marks
CA 2	**Seminar Presentations (20 marks- each topic carries 10 marks) - Unit IV** Students should present any two topics with PPTs	10 marks
CA 3	Submission of Industry Visit Project Report - **(30 marks) - Unit V**	20 marks
	Total	**40 marks**

1020235654	**Innovation & Startup**	L	T	P	C
PRACTICUM		1	0	2	2

Syllabus Contents

UNIT I	**INTRODUCTION TO INNOVATION**
An Introduction to Innovation and Creativity- Innovation in current Environment - Types of Innovation - Challenges of Innovation - Steps of Innovation Management - Divergent v/s Convergent thinking - Design thinking and Entrepreneurship.	6
UNIT II	**INCUBATION CLUBS, IPR, PATENTS AND COPYRIGHTS**
Idea Generation - Incubation Clubs - Prototype Development - Marketing of Innovation - Management of Innovation - Creation of IPR -Types of IPR - Patents and Copyrights - Patents in India - Technological and Non-Technological Innovation Process.	6
UNIT III	**GOVERNMENT AND NON-GOVERNMENT FUNDING SCHEMES FOR START-UPS**
An introduction to Start-up - Start-ups in India - Procedure for registration of Start-ups - Business Model- Business Plan - Case Studies - Opportunities and Challenges - Funding supports from Government Schemes -MUDRA, TANSEED, NEEDS, PMEGP, UYEGP – Non-Government Schemes - CSR Fund - Angel Investors - Venture Capitalist.	6
UNIT IV	
All the students have to select a minimum of 2 topics from the list given below. They are expected to collect the resources with the help of faculty assigned to them to prepare PPTs for presentation 1. Idea Generation. 2. Innovation Management. 3. Product Development.	9

4. Business Model Innovation. 5. Organizational Culture and Change Management. 6. Leadership and Innovation. 7. Barriers to Innovation. 8. Innovation Marketing. 9. E-Commerce success stories (any one). 10. Role of Start-ups in Higher Education. 11. Professional Networking in Building Brands. 12. How to start a start-up in India.	
UNIT V	**EXPOSURE TO INDUSTRY**
All the students should visit and study the nearby industries, incubation centres, start-ups etc., and select any one to prepare a project report which covers the Name of the Industry/Organization, Introduction of the Industry, Type of the Industry, Scope of the Industry, Plant Layout and Location, Details of Plant and Machineries, Process flow chart, Manufacturing Methods, Process of Manufacturing, Product Manufacturing, Quality Control, Marketing, Product selling - Conclusion.	**18**
Total	**45**

1020235654	**Innovation & Startup**	L	T	P	C
PRACTICUM		1	0	2	2

End Semester Examination - Project Exam

Students should be assessed for 100 Marks both by the internal examiner and external examiner appointed by the Chairman Board of Examinations.

Detailed Allocation of Marks

S. No	Description	Marks
Part A	Written Examination – Unit –I,II & III Theory Questions i) 10 questions out of 15 questions (10 x 3 marks = 30 marks) ii) 3 questions either or pattern (3 x 5 marks = 15 marks)	45
Part B i)	Presentation of Industry Visit Project Report	25
ii)	Interaction and Evaluation	30
	TOTAL	**100**

1020235773	**Industrial Training**	Summer Vacation	C
Internship			2

Introduction

Industrial training is a crucial component of the diploma engineering curriculum, designed to bridge the gap between theoretical knowledge and practical application. Typically conducted during vacation periods, this two-week training program provides students with hands-on experience in their respective engineering fields. The primary objectives are to enhance practical skills, familiarize students with industry standards, and prepare them for future employment.

Two-week industrial training during vacation periods is an invaluable part of diploma engineering education. It not only equips students with practical skills but also provides a comprehensive understanding of the industry, preparing them for successful engineering careers.

Objectives

1. Practical Exposure: Students gain direct exposure to real-world engineering practices, tools, and technologies.
2. Skill Enhancement: The training helps in developing technical and soft skills that are essential for professional growth.
3. Industry Insight: Students learn about the working environment, operational procedures, and challenges faced by industries.
4. Professional Networking: The training offers opportunities to interact with industry professionals, which can be beneficial for career prospects.
5. Application of Knowledge: It allows students to apply classroom knowledge to solve practical problems, enhancing their understanding and retention of engineering concepts.

Structure of the Training Program

- Orientation: Introduction to the company, its operations, and safety protocols.
- Project Assignment: Students are assigned specific projects or tasks relevant to their field of study.
- Supervision and Mentorship: Industry professionals guide and mentor students throughout the training.

1020235773	**Industrial Training**	Summer Vacation	C
Internship			2

- Skill Development Workshops: Sessions on technical skills, software tools, and industry best practices.
- Assessment and Feedback: Performance evaluations and constructive feedback to help students improve.

Benefits for Students

- Enhanced Employability: Practical experience makes students more attractive to potential employers.
- Confidence Building: Working in a real-world setting boosts confidence and professional demeanor.
- Clarified Career Goals: Exposure to various roles and responsibilities helps students define their career paths.

Course Outcomes

CO 1: Demonstrate proficiency in using industrial machinery, tools, and software.

CO 2: Able to identify, analyze, and solve engineering problems using industry-standard methods and practices.

CO 3: Gain a comprehensive understanding of industrial manufacturing processes, quality control, and safety practices.

CO 4: Exhibit improved communication, teamwork, and professional behavior in an industrial setting.

CO 5: Apply theoretical concepts learned in their coursework to practical engineering tasks and projects.

Duties Responsibilities of the Faculty Mentor.

One faculty mentor should be assigned for every 30 students by the HOD / Principal. Faculty mentors shall play a crucial role in overseeing and guiding students during their industrial training program in Diploma engineering.

Pre-Training Responsibilities:

1. Orientation and Preparation:
    - Conduct orientation sessions to familiarize students with the objectives, expectations, and guidelines of the industrial training program.

1020235773	**Industrial Training**	Summer Vacation	C
Internship			2

- Assist students in understanding the importance of industrial training in their academic and professional development.

2. Placement Coordination:
   - Collaborate with the placement cell or industry liaison office to secure suitable training placements for students that align with their academic specialization and career interests.
   - Facilitate communication between the institution and host organizations to ensure smooth coordination of training arrangements.
3. Training Plan Development:
   - Help students develop a detailed training plan outlining learning objectives, tasks, and expected outcomes for the training period.
   - Guide students in setting SMART (Specific, Measurable, Achievable, Relevant, Time-bound) goals for their training experience.

During Training Responsibilities:

4. Monitoring and Support:
   - Regularly monitor the progress of students during their industrial training. Maintain communication with both students and industry supervisors to track performance and address any issues that may arise.
   - Provide ongoing support and guidance to students, offering advice on technical challenges, professional conduct, and workplace etiquette.
5. Technical Guidance:
   - Offer technical guidance and mentorship related to the specific engineering discipline or specialization of the students. Help them apply theoretical knowledge to practical situations encountered in the industry.
6. Problem-Solving Assistance:
   - Assist students in overcoming obstacles or challenges encountered during their training. Encourage them to develop problem-solving skills and resilience in real-world engineering scenarios.

7. Feedback and Evaluation:
    - Provide constructive feedback on students' performance based on reports, assessments, and observations gathered from industry supervisors.
    - Evaluate students' achievements in relation to their training objectives and competencies developed during the program.

Post-Training Responsibilities:

8. Reflection and Debriefing:
    - Conduct debriefing sessions with students to reflect on their training experiences, discuss lessons learned, and identify areas for further improvement.
    - Help students articulate their learning outcomes and how these experiences contribute to their professional growth.
9. Documentation and Reporting:
    - Ensure comprehensive documentation of students' training activities, achievements, and feedback received from industry supervisors.
    - Prepare reports summarizing students' performance and submit these to relevant departments or committees for review and assessment.
10. Career Counseling:
    - Provide career guidance and counseling to students based on their industrial training experiences. Assist them in leveraging these experiences for future job applications or further academic pursuits.
11. Continuous Improvement:
    - Collaborate with industry partners to continuously improve the quality and relevance of the industrial training program.
    - Incorporate feedback from students and industry supervisors to enhance the effectiveness of future training placements.

By fulfilling these duties and responsibilities, faculty mentors contribute significantly to the overall educational experience and professional development of Diploma engineering students during their industrial training program.

1020235773	**Industrial Training**	Summer Vacation	C
Internship			2

Instructions to the students

Before Starting Industrial Training:

1. **Orientation and Preparation:**
    - Attend orientation sessions conducted by the institution or faculty mentors to understand the objectives, expectations, and guidelines of the industrial training program.
    - Familiarize yourself with the specific policies, procedures, and safety regulations of the host organization where you will be undergoing training.
2. Setting Goals:
    - Set clear and specific goals for your industrial training period. Define what skills, knowledge, and experiences you aim to gain during this time.
    - Discuss your goals with your faculty mentor and seek their guidance in developing a training plan that aligns with your career aspirations.
3. Professional Attire and Conduct:
    - Dress appropriately and professionally according to the standards of the industry and host organization.
    - Maintain a positive attitude, demonstrate punctuality, and adhere to workplace etiquette and norms.

During Industrial Training:

4. Learning and Engagement:
    - Actively engage in all assigned tasks and projects. Seek opportunities to learn new skills and technologies relevant to your field of study.
    - Take initiative in asking questions, seeking clarification, and participating in discussions with supervisors and colleagues.
5. Adaptability and Flexibility:
    - Adapt to the work environment and demonstrate flexibility in handling various responsibilities and challenges that arise during your training.
    - Be open to different roles and tasks assigned to you, as this will broaden your experience and skill set.

6. Professionalism and Communication:
    - Communicate effectively with supervisors, colleagues, and clients as required. Practice clear and concise verbal and written communication.
    - Demonstrate professionalism in all interactions, respecting confidentiality, and adhering to company policies and procedures.
7. Safety and Compliance:
    - Prioritize safety at all times. Familiarize yourself with safety protocols, procedures, and emergency exits in the workplace.
    - Follow all safety guidelines and regulations to ensure your well-being and that of others around you.

After Completing Industrial Training:

8. Reflection and Documentation:
    - Reflect on your training experience. Evaluate what you have learned, the challenges you faced, and how you have grown professionally.
    - Maintain a journal or log documenting your daily activities, achievements, and lessons learned during the training period.
9. Feedback and Evaluation:
    - Seek feedback from your industry supervisor and faculty mentor on your performance and areas for improvement.
    - Use constructive feedback to enhance your skills and competencies for future career opportunities.
10. Career Planning:
    - Use your industrial training experience to inform your career planning and decision-making process.
    - Discuss your career goals and aspirations with your faculty mentor or career counselor for guidance on next steps after completing your diploma.

By following these instructions, Diploma engineering students can make the most of their industrial training experience, gain valuable insights into their chosen field, and prepare themselves effectively for future professional endeavors.

1020235773	**Industrial Training**	Summer Vacation	C
Internship			2

Attendance Certification

Every student has to get their attendance certified by the industrial supervisor in the prescribed form supplied to them. Students have also to put their signature on the form and submit it to the institution faculty mentor.

Training Reports

The students have to prepare reports: The report in the form of a diary to be submitted to the concerned faculty mentor of the institution. This will be reviewed while awarding Internal assessment.

Industrial Training Diary

Students are required to maintain the record of day-to-day work done. Such a record is called Industrial training Diary. Students have to write this report regularly. All days for the week should be accounted for clearly giving attendance particulars (Presence, absence, Leave, Holidays etc.). The concern of the Industrial supervisor is to periodically check these progress reports.

In addition to the diary, students are required to submit a comprehensive report on training with details of the organisation where the training was undergone after attestation by the supervisors. The comprehensive report should incorporate study of plant / product / process / construction along with intensive in-depth study on any one of the topics such as processes, methods, tooling, construction and equipment, highlighting aspects of quality, productivity and system. The comprehensive report should be completed in the last week of Industrial training. Any data, drawings etc. should be incorporated with the consent of the Organisation.

1020235773	**Industrial Training**	Summer Vacation	C
Internship			2

Scheme of Evaluation

Internal Assessment

Students should be assessed for 40 Marks by industry supervisor and polytechnic faculty mentor for the Internal Assessment.

Sl. No.	Description	Marks
A	Punctuality and regularity. (Attendance)	10
B	Level / proficiency of practical skills acquired. Initiative in learning / working at site	10
C	Self expression / communication skills. Interpersonal skills / Human Relation.	10
D	Report and Presentation.	10
	Total	40

End Semester Examination - Project Exam

Students should be assessed for 100 Marks both by the internal examiner and external examiner appointed by the Chairman Board of Examinations after the completion of industrial training. The marks scored will be converted to 60 marks for the End Semester Examination.

Scheme of Evaluation

Sl. No.	Description	Marks
A	Daily Activity Report and Attendance certificate.	20
B	Comprehensive report on Internship, Relevant Internship Certificate from the concerned department.	30
C	Presentation by the student at the end of the Internship.	30
D	Viva Voce	20
	Total	100

2020235773	Mini Project (Sandwich Course Only)	L	T	P	C
PROJECT		0	0	4	2

Introduction

Every student must do one mini project in the sandwich diploma program. Students can do their project in Industry or R&D Lab or in-house or a combination of any two for the partial fulfillment for the award of Diploma in Engineering.

For the project works, the Department will constitute a three-member faculty committee to monitor the progress of the project and conduct reviews regularly.

If the projects are done in-house, the students must obtain the bonafide certificate for project work from the Project supervisor and Head of the Department, at the end of the semester. Students who have not obtained the bonafide certificate are not permitted to appear for the Project Viva Voce examination.

For the projects carried out in Industry, the students must submit a separate certificate from Industry apart from the regular bonafide certificate mentioned above. For Industry related projects there must be one internal faculty advisor / Supervisor from Industry (External), this is in addition to the regular faculty supervision.

The final examination for project work will be evaluated based on the final report submitted by the project group **of not exceeding four students**, and the viva voce by an external examiner.

Objectives

Academic project work plays a crucial role in the education of Diploma in Engineering students, as it helps them apply theoretical knowledge to practical situations and prepares them for real-world engineering challenges.

- **Integration of Knowledge**: Consolidate and integrate theoretical knowledge acquired in coursework to solve practical engineering problems.
- **Skill Development**: Enhance technical skills related to the specific field of engineering through hands-on experience and application.
- **Problem-Solving Abilities**: Develop critical thinking and problem-solving abilities by addressing complex engineering issues within a defined scope.
- **Project Management**: Gain experience in project planning, execution, and management, including setting objectives, timelines, and resource allocation.

2020235773	Mini Project (Sandwich Course Only)	L	T	P	C
PROJECT		0	0	4	2

- **Teamwork and Collaboration**: Foster teamwork and collaboration by working in multidisciplinary teams to achieve project goals and objectives.
- **Research Skills**: Acquire research skills by conducting literature reviews, gathering relevant data, and applying research methodologies to investigate engineering problems.
- **Innovation and Creativity**: Encourage innovation and creativity in proposing and developing engineering solutions that may be novel or improve upon existing methods.
- **Communication Skills**: Improve communication skills, both oral and written, by presenting project findings, writing technical reports, and effectively conveying ideas to stakeholders.
- **Ethical Considerations**: Consider ethical implications related to engineering practices, including safety, environmental impact, and societal concerns.
- **Professional Development**: Prepare for future professional roles by demonstrating professionalism, initiative, and responsibility throughout the project lifecycle.

Course Outcomes

CO 1: Demonstrate the ability to apply theoretical concepts and principles learned in coursework to solve practical engineering problems encountered during the project.

CO 2: Develop and enhance technical skills specific to the field of engineering relevant to the project, such as design, analysis, simulation, construction, testing, and implementation.

CO 3: Apply critical thinking and problem-solving skills to identify, analyze, and propose solutions to engineering challenges encountered throughout the project lifecycle.

CO 4: Acquire project management skills by effectively planning, organizing, and executing project tasks within defined timelines and resource constraints.

CO 5: Improve communication skills through the preparation and delivery of project reports, presentations, and documentation that effectively convey technical information to stakeholders.

2020235773	**Mini Project (Sandwich Course Only)**	L	T	P	C
PROJECT		0	0	4	2

Important points to consider to select the mini project.

- Selecting a project work in Diploma Engineering is a significant decision that can greatly influence your learning experience and future career prospects.
- Choose a project that aligns with your career aspirations and interests within the field of engineering. Consider how the project can contribute to your professional development and future opportunities.
- Ensure the project aligns with your coursework and specialization within the Diploma program. It should complement and build upon the knowledge and skills you have acquired in your studies.
- Evaluate the scope of the project to ensure it is manageable within the given timeframe, resources, and constraints. Avoid projects that are overly ambitious or impractical to complete effectively.
- Assess the availability of resources needed to conduct the project, such as equipment, materials, laboratory facilities, and access to relevant software or tools. Lack of resources can hinder project progress.
- Select a project that genuinely interests and motivates you. A project that captures your curiosity and passion will keep you engaged and committed throughout the project duration.
- Consider the availability and expertise of faculty advisors or industry mentors who can provide guidance and support throughout the project. Effective mentorship is crucial for success.
- Clearly define the learning objectives and expected outcomes of the project. Ensure that the project will help you achieve specific learning goals related to technical skills, problem-solving, and professional development.
- Look for opportunities to propose innovative solutions or explore new methodologies within your project. Projects that encourage creativity can set you apart and enhance your learning experience.

- Consider ethical implications related to the project, such as safety protocols, environmental impact, and compliance with ethical guidelines in research and engineering practices.
- Evaluate whether the project offers opportunities for collaboration with peers, experts from other disciplines, or industry partners. Interdisciplinary projects can broaden your perspective and enhance your teamwork skills.
- Consider the potential impact of your project on society or the engineering community. Projects that address significant challenges or contribute to social good can be highly fulfilling and make a meaningful difference.

By carefully considering these points, Diploma Engineering students can make informed decisions when selecting project work that not only enhances their academic learning but also prepares them for successful careers in engineering.

Duties Responsibilities of the internal faculty advisor.

Each group should have an internal faculty advisor assigned by the HOD/Principal.

- The project should be approved by the project monitoring committee constituted by the Chairman Board of Examinations.
- The project should be selected in the sixth semester itself. Each project shall have a maximum of four students in the project group.
- Provide comprehensive academic advising to help in the selection of appropriate project that align with their interests and career goals.
- Offer expertise and feedback to ensure rigorous methodology, innovative approaches, and meaningful contributions to the field.
- Assist in developing technical and professional skills through hands-on projects, laboratory work, and practical applications of theoretical knowledge.
- Provide personal mentorship, fostering a supportive relationship that encourages growth, resilience, and a positive academic experience.
- Facilitate connections between students and industry professionals, alumni, and other relevant networks to enhance their professional opportunities and industry exposure.

2020235773	**Mini Project (Sandwich Course Only)**	L	T	P	C
PROJECT		0	0	4	2

- Ensure students have access to necessary resources, including research materials, lab equipment, software, and academic literature.
- Regularly monitor and evaluate the progress of the project, providing constructive feedback and guidance to help them stay on track and achieve their goals.
- Instill and uphold high ethical and professional standards, encouraging students to practice integrity and responsibility in their work.
- Assist in preparing progress reports, writing recommendation letters, and facilitating grant applications.
- Organize and participate in workshops, seminars, and other educational events that enhance the learning experience and professional development .
- Address any issues or conflicts that arise, providing mediation and support to ensure a positive and productive academic environment.

Instructions to the students.

- Regularly meet with your internal faculty advisor for guidance on academic progress, research projects, and career planning. Be proactive in seeking advice and support from your faculty advisor.
- Use planners, calendars, and task management tools to keep track of assignments, project deadlines, and study schedules. Prioritize tasks to manage your time efficiently.
- Take advantage of opportunities to participate in projects and hands-on activities. These experiences are crucial for applying your theoretical knowledge and gaining practical skills.
- Focus on improving essential professional skills such as communication, teamwork, problem-solving, and leadership. Participate in workshops and seminars that enhance these competencies.
- Actively seek networking opportunities through industry events, seminars, and meetings. Establish connections with peers, alumni, and professionals in your field to build a strong professional network.

2020235773	Mini Project (Sandwich Course Only)	L	T	P	C
PROJECT		0	0	4	2

- Seek internships, co-op programs, or part-time jobs related to your field of study. Real-world experience is invaluable for understanding industry practices and enhancing your employability.
- Uphold high ethical standards in all your academic and professional activities. Practice integrity, honesty, and responsibility. Adhere to the ethical guidelines and standards set by your institution and the engineering profession.
- Adopt a mindset of lifelong learning. Stay updated with the latest developments and trends in engineering by reading industry journals, attending conferences, and taking additional courses.

Documents to be submitted by the student for a project.

Submit a printed report of your project work along with the fabrication model / analysis report for the End Semester Examination.

Rubrics for Mini Project Work

Sl. No.	Topics	Description
1	Objectives	Clearly defined and specific objectives outlined. Objectives align with the project's scope and purpose.
2	Literature Review	Thorough review of relevant literature. Identification of gaps and justification for the project's contribution.
3	Research Design and Methodology	Clear explanation of the research design. Appropriateness and justification of chosen research methods.

2020235773	**Mini Project (Sandwich Course Only)**	L	T	P	C
PROJECT		0	0	4	2

4	Project Management	Adherence to project timeline and milestones. Effective organization and planning evident in the project execution.
5	Documentation	Comprehensive documentation of project details. Clarity and completeness in recording methods, results, and challenges.
6	Presentation Skills	Clear and articulate communication of project findings. Effective use of visuals, if applicable.
7	Analysis and Interpretation	In-depth analysis of data. Clear interpretation of results in the context of research questions.
8	Problem-Solving	Demonstrated ability to identify and address challenges encountered during the project. Innovative solutions considered where applicable.
9	Professionalism and Compliance	Adherence to ethical standards in research. Compliance with project guidelines and requirements.
10	Quality of Work	Overall quality and contribution of the project to the field. Demonstrated effort to produce high-quality work.

2020235773	Mini Project (Sandwich Course Only)	L	T	P	C
PROJECT		0	0	4	2

SCHEME OF EVALUATION

The mark allocation for Internal and End Semester Viva Voce are as below.

Internal Mark Split (40 Marks)*		
Review 1 (10 Marks)	Review 2 (15 Marks)	Review 3 (15 marks)
Committee: 5 Marks. Supervisor: 5 Marks	Committee: 7.5 Marks Supervisor: 7.5 Marks	Committee: 7.5 Marks Supervisor: 7.5 Marks

Note: * The rubrics should be followed for the evaluation of the internal marks during reviews.

END SEMESTER EXAMINATION - Project Exam

The performance of each student in the project group would be evaluated in a viva voce examination conducted by a committee consisting of an external examiner and the Department project supervisor and an internal examiner.

End Semester (100)#			
Record (20 Marks)	Presentation (20 Marks)	Viva Voce (20 Marks)	Model / Analysis Report (40 Marks)
External: 10 Internal: 5 Supervisor: 5	External: 10 Internal: 5 Supervisor: 5	External: 10 Internal: 5 Supervisor: 5	External: 20 Internal: 10 Supervisor: 10

 # The marks scored will be converted to 60 Marks.

6000236111	**Advanced Engineering Mathematics**	L	T	P	C
THEORY		3	0	0	3

Introduction

Mathematics is essential for engineering students to understand core engineering subjects. It provides the framework for engineers to solve problems in engineering domains. This course is designed to bridge the gap between diploma mathematics and B.E/B.Tech mathematics in matrix algebra, differential calculus, vector calculus, differential equations, and Laplace transforms.

Course Objectives

The objective of this course is to enable the students to

1. Understand the concepts of eigen-values and eigen-vectors of matrices.
2. Learn the notation of partial differentiation and determine the extremities of functions of two variables.
3. Acquire knowledge in vector calculus which is significantly used to solve engineering problems.
4. Formulate and solve differential equations.
5. Understand Laplace transformation and its engineering applications.

Course Outcomes

After successful completion of this course, the students should be able to

CO1: Find eigenvalues and corresponding eigenvectors of a square matrix.

CO2: Apply the knowledge of partial differentiation to evaluate Jacobian and extremities of two variable functions.

CO3: Evaluate the gradient of a scalar field and the divergence and curl of vector fields.

CO4: Solve ordinary differential equations using various techniques.

CO5: Use Laplace transforms to solve first-order ordinary differential equations.

Pre-requisites

Matrices, Determinants, Differentiation, Integration and Vector Algebra.

6000236111	**Advanced Engineering Mathematics**	L	T	P	C
THEORY		3	0	0	3

CO/PO Mapping

CO / PO	PO1	PO2	PO3	PO4	PO5	PO6	PO7
CO1	3	3	2	1	1	1	3
CO2	3	3	2	1	1	1	3
CO3	3	3	2	1	1	1	3
CO4	3	3	2	1	1	1	3
CO5	3	3	2	1	1	1	3

Legend: 3-High Correlation, 2-Medium Correlation, 1-Low Correlation

Instructional Strategy

- A theory-demonstrate-practice-activity strategy may be used to ensure that learning is outcome-based.
- All demonstrations/Hands-on practices might be under a simulated environment.
- Use an inducto-deductive approach to achieve the desired learning objectives.
- Use open-ended questions to nurture the problem-solving and reasoning skills among students.
- Support and guide the students for self-study.
- State the need for mathematics with engineering studies and provide real-life examples.

6000236111	**Advanced Engineering Mathematics**	L	T	P	C
THEORY		3	0	0	3

Assessment Methodology

	Continuous Assessment (40 marks)				**End Semester Examination (60 marks)**
	CA1	**CA2**	**CA3**	**CA4**	
Mode	Written test (Two units)	Written test (Another Two units)	Quiz MCQ (Online / Offline)	Model Examination	Written Examination
Duration	2 Periods	2 Periods	1 Hour	3 Hours	3 Hours
Exam Marks	50	50	60	100	100
Converted to	15	15	5	20	60
Marks	15		5	20	60
Tentative Schedule	6th Week	12th Week	13-14th Week	16th Week	

CA1 and CA2: Assessment written test should be conducted for 50 Marks for two units. The marks scored will be converted to 15 Marks. Best of one will be considered for the internal assessment of 15 Marks.

CA1and CA2, Assessment test should be conducted for two units as below.

(5 X 10 Marks = 50 Marks).

Eight questions will be asked, students should write Five questions. Each unit Four questions can be asked. Each question may have subdivisions. Maximum two subdivisions shall be permitted.

6000236111	**Advanced Engineering Mathematics**	L	T	P	C
THEORY		3	0	0	3

CA3: 60 MCQ can be asked by covering the entire portion. It may be conducted by Online / Offline. The answer scripts of every student (online / offline) for this assessment should be kept for records and future verification. The marks scored should be converted to 5 marks for the internal assessment.

CA4: Model examination should be conducted as per the end semester question pattern. The marks should be converted to 20 marks for the internal assessment.

Question Pattern:

Answer Ten questions by selecting two questions from each unit. Each question carries 10 marks each.

Four questions will be asked from every unit, students should write any two questions. The question may have two subdivisions only.

Syllabus Contents

Unit I	**EIGENVALUES AND EIGENVECTORS**	
Characteristic equation – Eigen-values of 2×2 and 3×3 real matrices – Eigen-vectors of 2×2 real matrices – Properties of eigen-values (excluding proof) – Cayley-Hamilton theorem (excluding proof) – Simple problems.		7
Unit II	**FUNCTIONS OF SEVERAL VARIABLES**	
Partial derivatives of two variable and three variable functions (up to second order) – Homogeneous functions and Euler's theorem (excluding proof) – Jacobian matrix and determinant – Maxima and minima of functions of two variables – Simple problems.		7
Unit III	**VECTOR CALCULUS**	
Scalar field and Vector field – Vector differential operator – Gradient of a scalar field – Directional derivative – Divergence and curl of a vector field (excluding properties) – Solenoidal and irrotational vector fields – Simple problems.		7

6000236111	Advanced Engineering Mathematics	L	T	P	C
THEORY		3	0	0	3

Unit IV	DIFFERENTIAL EQUATIONS	
Differential equation – Formation – Order and degree – Solution of a differential equation – Equations of first order and first degree – Variable separable method – Leibnitz's Linear equations – Second order equations of the form $(aD^2 + bD + c)y = e^{nx}$ where a, b, c and n are constants and the auxiliary equation $am^2 + bm + c = 0$ has only real roots) – Complementary function – Particular integral – General solution – Simple problems.		7
Unit V	**LAPLACE TRANSFORMS**	
Definition of Laplace transform – Laplace transforms of standard functions - Linearity and change of scale property (excluding proofs) – First shifting property – Laplace transforms of derivatives – Properties (excluding proofs) – Inverse Laplace transforms – Properties (excluding proofs) – Solving first order ordinary differential equation using Laplace transforms – Simple problems.		7
	Revision + Test	10
	TOTAL HOURS	45

Suggested list of Students Activity,

- Demonstrate the applications of eigen-values in stability analysis, decouple of three-phase systems and vibration analysis.
- Demonstrate maxima and minima of two variable functions using GeoGebra graphing calculator.
- Demonstrate solenoidal vector field and irrotational vector field using engineering applications.
- Demonstrate the applications of differential equations in solving engineering problems.
- Presentation /Seminars by students.
- Quizzes.

6000236111	**Advanced Engineering Mathematics**	L	T	P	C
THEORY		3	0	0	3

Reference Books:

1. John Bird, Higher Engineering Mathematics, Routledge, 9th Edition, 2021.
2. Grewal, B.S., Higher Engineering Mathematics, Khanna Publishers, 42nd Edition, 2012.
3. Arumugam, S., Thangapandi Isaac, A., & Somasundaram, A., Differential Equations and Applications, Yes Dee Publishing Pvt. Ltd., 2020.
4. Duraipandian, P., & Kayalal Pachaiyappa, Vector Analysis, S Chand and Company Limited, 2014.
5. Narayanan, S., & Manicavachagom Pillai T.K., Calculus Volume I and II, .Viswanathan Publishers Pvt. Ltd., 2007.

Web Reference

1. https://www.khanacademy.org/math/
2. https://www.mathportal.org/
3. https://openstax.org/subjects/math/
4. https://www.mathhelp.com/
5. https://www.geogebra.org/
6. https://www.desmos.com/
7. https://phet.colorado.edu/

END SEMESTER QUESTION PATTERN - Theory Exam

Duration: 3 Hours. **Maximum Marks: 100**

Note: Answer Ten questions by selecting Two questions from each unit. Each question carries 10 marks.

Instruction to the question setters.

Each unit should have four questions. Each question carries 10 Marks. Each question may have two subdivisions only.

6000236112	**Entrepreneurship**	L	T	P	C
THEORY		3	0	0	3

Introduction

Development of a diploma curriculum is a dynamic process responsive to the society and reflecting the needs and aspirations of its learners. Fast changing society deserves changes in educational curriculum particularly to establish relevance to emerging socio-economic environments; to ensure equity of opportunity and participation and finally promote concern for excellence. In this context the course on entrepreneurship and start ups aims at instilling and stimulating human urge for excellence by realizing individual potential for generating and putting to use the inputs relevant to social prosperity and thereby ensuring good means of living for every individual, providing jobs and developing the Indian economy.

Course Objectives

After completing this subject, the student will be able to

- Acquire entrepreneurial spirit and resourcefulness
- Familiarize Acquire knowledge about the business idea and product selection
- Analyze the banking and financial institutions
- Understand the pricing policy and cost analysis
- Get knowledge about the business plan preparation

Course Outcomes

CO1: Explain the process of entrepreneurship

CO2: Analyse the importance of generation of ideas and product selection

CO3: Familiarization of various financial and non financial schemes

CO4: Acquire various cost components to arrive pricing of the product

CO5: Learn the preparation of project feasibility report

Pre-requisites

Knowledge of basics of Engineering and Industrial engineering

6000236112	**Entrepreneurship**	L	T	P	C
THEORY		3	0	0	3

CO/PO Mapping

CO / PO	PO1	PO2	PO3	PO4	PO5	PO6	PO7
CO1	-	-	-	-	3	1	3
CO2	-	-	-	-	3	3	3
CO3	-	-	-	1	-	3	2
CO4	-	1	3	3	2	3	2
CO5	-	2	3	3	3	3	3

Legend: 3-High Correlation, 2-Medium Correlation, 1-Low Correlation

Instructional Strategy

- Engage and Motivate: Instructors should actively engage students to boost their learning confidence.
- Real-World Relevance: Incorporate relatable, real-life examples and applications to help students understand and appreciate course concepts.
- Interactive Learning: Utilize demonstrations and plan interactive student activities for an engaging learning experience.
- Application-Based Learning: Employ a theory-demonstrate-practice- activity strategy throughout the course to ensure outcome-driven learning and employability.
- Simulation and Real-World Practice: Conduct demonstrations and hands-on activities in a simulated environment, transitioning to real- world scenarios when possible.

6000236112	**Entrepreneurship**	L	T	P	C
THEORY		3	0	0	3

Assessment Methodology

	Continuous Assessment (40 marks)				**End Semester Examination (60 marks)**
	CA1	**CA2**	**CA3**	**CA4**	
Mode	Written test (Two units)	Written test (Another Two units)	Quiz MCQ (Online / Offline)	Model Examination	Written Examination
Duration	2 Periods	2 Periods	1 Hour	3 Hours	3 Hours
Exam Marks	50	50	60	100	100
Converted to	15	15	5	20	60
Marks	15		5	20	60
Tentative Schedule	6th Week	12th Week	13-14th Week	16th Week	

CA1 and CA2: Assessment written test should be conducted for 50 Marks for two units. The marks scored will be converted to 15 Marks. Best of one will be considered for the internal assessment of 15 Marks.

CA1and CA2, Assessment test should be conducted for two units as below.

(5 X 10 Marks = 50 Marks).

Eight questions will be asked, students should write Five questions. Each unit Four questions can be asked. Each question may have subdivisions. Maximum two subdivisions shall be permitted.

CA3: 60 MCQ can be asked by covering the entire portion. It may be conducted by Online / Offline. The answer scripts of every student (online / offline) for this assessment should be kept

6000236112	Entrepreneurship	L	T	P	C
THEORY		3	0	0	3

for records and future verification. The marks scored should be converted to 5 marks for the internal assessment.

CA4: Model examination should be conducted as per the end semester question pattern. The marks should be converted to 20 marks for the internal assessment.

Question Pattern:

Answer Ten questions by selecting two questions from each unit. Each question carries 10 marks each.

Four questions will be asked from every unit, students should write any two questions. The question may have two subdivisions only.

Syllabus Contents

Unit I	**Entrepreneurship – Introduction and Process**	
Concept of entrepreneurship - Importance, Myths about Entrepreneurship, Pros and Cons of Entrepreneurship, Process of Entrepreneurship, , Competencies and characteristics of an entrepreneur -, Ethical Entrepreneurship, Entrepreneurial Values and Attitudes, Creativity, Innovation and entrepreneurship- Entrepreneurs - as problem solvers, Mindset of an employee and an entrepreneur, - Risk Taking-Concepts		7
Unit II	**Business Idea**	
Types of Business: Manufacturing, Trading and Services, Stakeholders: sellers, vendors and consumers and Competitors, E- commerce Business Models, business idea generation -Types of Resources - Human, Capital and Entrepreneurial tools and resources, etc.,- setting business goals- Patent, copyright and Intellectual property rights, Customer Relations and Vendor Management, -Business Ideas vs. Business Opportunities, Opportunity – SWOT ANALYSIS of a business idea - Business Failure – causes and remedies.- Types of business risks,		7

6000236112	Entrepreneurship	L	T	P	C
THEORY		3	0	0	3

Unit III	Banking	
Size and capital based classification of business enterprises- Role of financial institutions, Role of Government policy, Entrepreneurial support systems, Incentive schemes for state government, and Incentive schemes for Central governments.		7
Unit IV	**Pricing and Cost Analysis**	
Types of Costs - Variable - Fixed- Operational Costs - Break Even Analysis - for single product or service, -financial Business Case Study, Understand the meaning and concept of the term Cash Inflow and Cash Outflow- Pricing- Calculate Per Unit Cost of a single product, , Understand the importance and preparation of Income Statement, Prepare a Cash Flow Projection- Factors affecting pricing.- GST.		7
Unit V	**Business Plan Preparation**	
Feasibility Report – Technical analysis, financial analysis- Market Research - Concept, Importance and Process- tools for market research- Market Sensing and Testing, Marketing and Sales strategy, Digital marketing, Branding - Business name, logo, tag line, Promotion strategy, Business Plan Preparation, -Concept and Importance, , Execution of Business Plan.		7
	Revision + Test	10
	TOTAL HOURS	45

Suggested list of Students Activity.

1. Students can explore app development or web design. They'll learn about technology, user experience, and marketing.
2. Hosting events, workshops, or conferences allows students to practice project management, networking, and marketing skills.
3. Encourage students to address social or environmental issues through innovative business solutions. This fosters empathy and creativity.

6000236112	Entrepreneurship	L	T	P	C
THEORY		3	0	0	3

4. Part of entrepreneurship clubs or organizations provides networking opportunities, mentorship, and exposure to real-world challenges.
5. Competitions like business plan contests or pitch events allow students to showcase their ideas and receive feedback.
6. Students can create and sell handmade crafts, artwork, or other products. This teaches them about production, pricing, and customer relations.
7. Students can provide consulting services in areas they're knowledgeable about, such as social media marketing or financial planning.
8. Encourage students to create and manage their own small business or offer freelance services. This hands-on experience helps them understand various aspects of entrepreneurship.

Text and Reference Books:

1. G.K. Varshney, Fundamentals of Entrepreneurship, Sahitya Bhawan Publications, Agra., 2019.
2. H.Nandan, Fundamentals of Entrepreneurship, Prentice Hall India Learning Private Limited, Third Edition, 2013.
3. R.K. Singal, Entrepreneurship Development & Management, S K Kataria and Sons, 2013.

Web Reference:

- https://ocw.mit.edu/courses/15-390-new-enterprises-spring-2013/resources/lecture-1/
- https://onlinecourses.nptel.ac.in/noc20_ge08/preview

END SEMESTER QUESTION PATTERN - Theory Exam

Duration: 3 Hours. **Maximum Marks: 100**

Note: Answer Ten questions by selecting Two questions from each unit. Each question carries 10 marks.

Instruction to the question setters.

Each unit should have four questions. Each question carries 10 Marks. Each question may have two subdivisions only.

6000236113	**Project Management**	L	T	P	C
THEORY		3	0	0	3

Introduction

Project management is the systematic application of knowledge, skills, tools, and techniques to project activities to meet specific project requirements. It involves planning, organizing, and managing resources to achieve project goals within defined scope, time, and budget constraints. Project management encompasses several key processes and phases, including initiation, planning, execution, monitoring and controlling, and closing. It is essential across various industries to ensure projects are completed successfully, efficiently, and effectively, aligning with organizational objectives and stakeholder expectations. Project managers play a crucial role in leading teams, managing risks, ensuring quality, and communicating with stakeholders to drive project success.

Course Objectives

After completing this subject, the student will be able,

- To understand the concept, characteristics and elements of projects.
- To understand the stages in Project Life Cycle.
- To appreciate the need for Project Portfolio Management System.
- To know the considerations in choosing appropriate project management structure.
- To understand the components of techno-economic feasibility studies.
- To know about the detailed project report
- To learn about project constraints.
- To understand the techniques of evaluation.
- To get insight into the Social Cost Benefit Analysis Method.
- To know how to construct project networks using PERT and CPM.
- To learn how to crash project networks
- To understand the meaning of project appraisal.
- To understand the meaning of project audits.
- To know the qualities of an effective project manager.
- To understand the stages in the Team Development model.

6000236113	**Project Management**	L	T	P	C
THEORY		3	0	0	3

Course Outcomes

CO 1: Explain the principles of Project Management

CO 2: Create and manage project schedules.

CO 3: Create structure and manage the project commitments.

CO 4: Acquire to Gain enterprise support.

CO 5: Prepare a Detailed Project Report (DPR).

Pre-requisites

Basic Knowledge.

CO/PO Mapping

CO / PO	PO1	PO2	PO3	PO4	PO5	PO6	PO7
CO1	3	-	-	-	-	3	1
CO2	3	-	-	-	1	3	1
CO3	3	-	-	1	1	3	1
CO4	3	-	-	-	1	3	1
CO5	3	-	-	1	1	3	1

Legend: 3-High Correlation, 2-Medium Correlation, 1-Low Correlation

6000236113	**Project Management**	L	T	P	C
THEORY		3	0	0	3

Instructional Strategy

- It is advised that teachers take steps to pique pupils' attention and boost their curiosity to learn.
- Implement task-based learning activities where students work on specific tasks or projects.
- Incorporate technology tools and resources, such as online platforms, interactive multimedia, and virtual communication tools, to enhance engagement and provide additional practice opportunities.
- All demonstrations/Hand-on practices may be followed in the real environment as far as possible.

Assessment Methodology

	Continuous Assessment (40 marks)				**End Semester Examination (60 marks)**
	CA1	**CA2**	**CA3**	**CA4**	
Mode	Written test (Two units)	Written test (Another Two units)	Quiz MCQ (Online / Offline)	Model Examination	Written Examination
Duration	2 Periods	2 Periods	1 Hour	3 Hours	3 Hours
Exam Marks	50	50	60	100	100
Converted to	15	15	5	20	60
Marks	15		5	20	60
Tentative Schedule	6th Week	12th Week	13-14th Week	16th Week	

6000236113	**Project Management**	L	T	P	C
THEORY		3	0	0	3

CA1 and CA2: Assessment written test should be conducted for 50 Marks for two units. The marks scored will be converted to 15 Marks. Best of one will be considered for the internal assessment of 15 Marks.

CA1and CA2, Assessment test should be conducted for two units as below.

(5 X 10 Marks = 50 Marks).

Eight questions will be asked, students should write Five questions. Each unit Four questions can be asked. Each question may have subdivisions. Maximum two subdivisions shall be permitted.

CA3: 60 MCQ can be asked by covering the entire portion. It may be conducted by Online / Offline. The answer scripts of every student (online / offline) for this assessment should be kept for records and future verification. The marks scored should be converted to 5 marks for the internal assessment.

CA4: Model examination should be conducted as per the end semester question pattern. The marks should be converted to 20 marks for the internal assessment.

Question Pattern:

Answer Ten questions by selecting two questions from each unit. Each question carries 10 marks each.

Four questions will be asked from every unit, students should write any two questions. The question may have two subdivisions only.

Syllabus Contents

Unit I	**Project Management – An Overview, Project Portfolio Management System and Structure, Steps in Defining Project and Project Delays**
Project – Classification – Importance of Project Management – An Integrated Approach – Project Portfolio Management System – The Need – Choosing the appropriate Project Management Structure: Organizational considerations and project considerations – steps in defining the project – project Rollup – Process	7

breakdown structure – Responsibility Matrices – External causes of delay and internal constraints.		
Unit II	**Various Stages and Components of Project Feasibility Studies, Phases of a Project, Stages in Project Life Cycle and Project Constraints**	
Project feasibility studies - Opportunity studies, General opportunity studies, specific opportunity studies, pre-feasibility studies, functional studies or support studies, feasibility study – components of project feasibility studies – Managing Project resources flow – project planning to project completion: Pre-investment phase, Investment Phase and operational phase – Project Life Cycle – Project constraints.		7
Unit III	**Project Evaluation under Certainty and Uncertainty, Project Evaluation, Commercial and Social Cost Benefit Analysis**	
Project Evaluation under certainty - Net Present Value (Problems - Case Study), Benefit Cost Ratio, Internal Rate of Return, Urgency, Payback Period, ARR – Project Evaluation under uncertainty – Methodology for project evaluation – Commercial vs. National Profitability – Social Cost Benefit Analysis, Commercial or National Profitability, social or national profitability.		7
Unit IV	**Developing Project Network using PERT and CPM, Project Appraisal and Control Process.**	
Developing a Project Plan - Developing the Project Network – Constructing a Project Network (Problems) – PERT – CPM – Crashing of Project Network (Problems - Case Study) – Resource Leveling and Resource Allocation – how to avoid cost and time overruns – Steps in Project Appraisal Process – Project Control Process – Control Issues – Project Audits – the Project Audit Process – project closure – team, team member and project manager evaluations.		7

6000236113	**Project Management**	L	T	P	C
THEORY		3	0	0	3

Unit V	**Project Managing Versus Leading of Project, Qualities of Project Manager and Managing Project Teams, Team Building Models and Performance Teams and Team Pitfalls.**
Managing versus leading a project - managing project stakeholders – social network building (Including management by wandering around) – qualities of an effective project manager – managing project teams – Five Stage Team Development Model – Situational factors affecting team development – project team pitfalls.	7
Revision + Test	10
TOTAL HOURS	45

Suggested list of Students Activity,

Project Simulation and Role-Playing:

- Activity: Participate in simulated project scenarios where students take on different roles within a project team (e.g., project manager, team member, stakeholder).
- Purpose: This helps students understand the dynamics of project management, including leadership, communication, and team collaboration.

Case Study Analysis:

- Activity: Analyze real-world case studies of successful and failed projects.
- Purpose: This activity enables students to apply theoretical knowledge to practical situations, identify best practices, and learn from the challenges and solutions implemented in real projects.

Project Plan Development:

- Activity: Develop a comprehensive project plan for a hypothetical or real project, including scope, schedule, budget, risk management, and quality management plans.
- Purpose: This allows students to practice creating detailed and structured project plans, honing their skills in planning and organizing project activities.

6000236113	Project Management	L	T	P	C
THEORY		3	0	0	3

Group Project:

- Activity: Work in teams to manage a project from initiation to closure, simulating a real project environment.
- Purpose: Group projects help students learn how to work collaboratively, manage group dynamics, and apply project management tools and techniques in a team setting.

Project Management Software Training:

- Activity: Gain hands-on experience with project management software such as Microsoft Project, Asana, or Trello.
- Purpose: This activity equips students with practical skills in using technology to plan, track, and manage project tasks and resources efficiently.

Reference Books:

1. Clifford F. Gray And Erik W. Larson, Project Management – The Managerial Process, Tata Mcgraw Hill.
2. Dragan Z. Milosevic, Project Management Toolbox: Tools And Techniques For The Practicing Project Manager,
3. Gopalakrishnan, P/ Ramamoorthy, V E, Textbook Of Project Management, Macmillan India. Ltd.
4. Harold Kerzner, Project Management: A Systems Approach To Planning, Scheduling, And Controlling, Eighth Edition, John Wiley & Sons
5. Jason Charvat, Project Management Methodologies: Selecting, Implementing, And Supporting Methodologies And Processes For Projects, John Wiley & Sons
6. Kevin Forsberg, Ph.D, Hal Mooz, Visualizing Project Management: A Model For Business And Technical Success, Second Edition, Pmp And Howard Cotterman, John Wiley & Sons.

Web Reference

https://youtu.be/pc9nvBsXsuM

NPTEL Courses

https://youtu.be/PqQqTAu_FiM

6000236113	Project Management	L	T	P	C
THEORY		3	0	0	3

END SEMESTER QUESTION PATTERN - Theory Exam

Duration: 3 Hours. **Maximum Marks: 100**

Note: Answer Ten questions by selecting Two questions from each unit. Each question carries 10 marks.

Instruction to the question setters.

Each unit should have four questions. Each question carries 10 Marks. Each question may have two subdivisions only.

6000236114	**Finance Fundamentals**	L	T	P	C
THEORY		3	0	0	3

Introduction

This course gives a deep insight into the finance fundamentals such as money management and the process of acquiring needed funds. It also encompasses the oversight, creation, and study of money, banking, credit, investments, assets, liabilities that make up financial systems and improves overall financial literacy.

Course Objectives

The objective of this course is to

1. Identify different ways to save money for future
2. Understand various techniques to raise capital
3. Get acquainted with the essential terminologies used in finance language
4. Get exposed to different types of budgeting
5. Instill the concept of costing and its impact on profitability

Course Outcomes

After successful completion of this course, the students should be able to

CO1: Manage financial resources effectively to achieve personal goals

CO2: Explain the procedure for Business Funding

CO3: Exhibit financial literacy through the usage of different terminologies appropriate to the context

CO4: Differentiate the types of budgeting and allocate the resources

CO5: Apply the idea of marginal costing in decision making

Pre-requisites

Knowledge of basic mathematics

6000236114	Finance Fundamentals	L	T	P	C
THEORY		3	0	0	3

CO/PO Mapping

CO / PO	PO1	PO2	PO3	PO4	PO5	PO6	PO7
CO1	3	-	-	-	1	-	2
CO2	3	-	-	-	1	-	2
CO3	3	-	-	-	1	-	2
CO4	3	-	-	-	1	-	2
CO5	3		-	-	1	-	2

Legend: 3-High Correlation, 2-Medium Correlation, 1-Low Correlation

Instructional Strategy

- Engage and Motivate: Instructors should actively engage students to boost their learning confidence.
- Real-World Relevance: Incorporate relatable, real-life examples and applications to help students understand and appreciate course concepts.
- Interactive Learning: Utilize demonstrations and plan interactive student activities for an engaging learning experience.
- Application-Based Learning: Employ a theory-demonstrate-practice- activity strategy throughout the course to ensure outcome-driven learning and employability.
- Simulation and Real-World Practice: Conduct demonstrations and hands-on activities in a simulated environment, transitioning to real- world scenarios when possible.

6000236114	Finance Fundamentals	L	T	P	C
THEORY		3	0	0	3

Assessment Methodology

	Continuous Assessment (40 marks)				End Semester Examination (60 marks)
	CA1	**CA2**	**CA3**	**CA4**	
Mode	Written test (Two units)	Written test (Another Two units)	Quiz MCQ (Online / Offline)	Model Examination	Written Examination
Duration	2 Periods	2 Periods	1 Hour	3 Hours	3 Hours
Exam Marks	50	50	60	100	100
Converted to	15	15	5	20	60
Marks	15		5	20	60
Tentative Schedule	6th Week	12th Week	13-14th Week	16th Week	

CA1 and CA2: Assessment written test should be conducted for 50 Marks for two units. The marks scored will be converted to 15 Marks. Best of one will be considered for the internal assessment of 15 Marks.

CA1and CA2, Assessment test should be conducted for two units as below.

(5 X 10 Marks = 50 Marks).

Eight questions will be asked, students should write Five questions. Each unit Four questions can be asked. Each question may have subdivisions. Maximum two subdivisions shall be permitted.

6000236114	Finance Fundamentals	L	T	P	C
THEORY		3	0	0	3

CA3: 60 MCQ can be asked by covering the entire portion. It may be conducted by Online / Offline. The answer scripts of every student (online / offline) for this assessment should be kept for records and future verification. The marks scored should be converted to 5 marks for the internal assessment.

CA4: Model examination should be conducted as per the end semester question pattern. The marks should be converted to 20 marks for the internal assessment.

Question Pattern:

Answer Ten questions by selecting two questions from each unit. Each question carries 10 marks each.

Four questions will be asked from every unit, students should write any two questions. The question may have two subdivisions only.

Syllabus Contents

UNIT I	**Personal Finance**	
Personal Finance – Meaning, Objectives and advantages – Individual Perspective – Family Perspective – Time Value of Money – Personal Savings: Meaning, Different modes of Saving – Bank Deposit, Online Investments, Insurance, Stocks, Gold, Real Estate – Returns Vs Risk – Financial Discipline – Setting Alerts for commitments (With Real time Examples).		7
UNIT II	**Business Funding**	
Sources: Personal Savings – Borrowings - Venture Capital – Venture Capital Process – Commercial Banks – Government Grants and Scheme.		7
UNIT III	**Finance language**	
Capital – Drawing – Income – Expenditure – Revenue Vs Capital Items – Assets – Fixed Assets – Current Assets – Fictitious Assets – Liabilities – Long-term Liabilities – Current Liabilities – Internal Liabilities – External Liabilities –		7

6000236114	**Finance Fundamentals**	L	T	P	C
THEORY		3	0	0	3

Shareholders fund: Equity Share capital, Preference Share Capital, Reserve & Surplus – Borrowings: Debentures, Bank Loan, Other Loan – Depreciation – Reserve Vs Provision.		
UNIT IV	**Budgeting**	
Budgetary Control – Meaning – Preparation of various budgets – Purchase budget – Sales Budget – Production budget – Cash Budget – Flexible budgets. (With Problems)		7
UNIT V	**Marginal Costing**	
Marginal Costing – Meaning – Marginal Costing Vs Absorption Costing – Concepts of Variable Cost, Fixed Cost and Contribution – PV Ratio – Break Even Point – Margin of Safety – Key Factor – Application of Marginal Costing in decision making – Make or Buy – Shutdown or Continue – Exploring New Markets (With Problems)		7
Revision + Test		10

Suggested list of Students Activity,

Financial Statement Analysis:

- Activity: Analyze and interpret financial statements, including balance sheets, income statements, and cash flow statements of different companies.
- Purpose: This activity helps students understand the financial health and performance of organizations, developing skills in financial analysis and critical thinking.

Investment Portfolio Management:

- Activity: Create and manage a simulated investment portfolio, making decisions on asset allocation, stock selection, and diversification.
- Purpose: This allows students to apply theoretical concepts in a practical setting, learning how to evaluate investment opportunities and manage financial risk.

6000236114	Finance Fundamentals	L	T	P	C
THEORY		3	0	0	3

Case Study Analysis:

- Activity: Examine real-world case studies involving financial decisions made by companies, such as capital budgeting, mergers and acquisitions, and financial restructuring.
- Purpose: Case studies provide insights into the application of finance principles in business scenarios, enhancing problem-solving and decision-making skills.

Classroom Discussions and Debates:

- Activity: Participate in discussions and debates on current financial issues, market trends, and economic policies.
- Purpose: Engaging in discussions helps students stay informed about the latest developments in finance, develop their communication skills, and form well-rounded opinions on financial matters.

Reference Books:

1. Banking Theory, Law & Practice - Dr.L.Natarajan, Margham Publications.
2. Corporate Accounting by T.S.Reddy and Dr.A.Murthy, Margham Publications.
3. Management Accounting by T.S.Reddy and Dr.Y.Hariprasd Reddy, Margham Publications.
4. Cost Accounting by T.S.Reddy and Dr.Y.Hariprasd Reddy, Margham Publications.

END SEMESTER QUESTION PATTERN - Theory Exam

Duration: 3 Hours. **Maximum Marks: 100**

Note: Answer Ten questions by selecting Two questions from each unit. Each question carries 10 marks.

Instruction to the question setters.

Each unit should have four questions. Each question carries 10 Marks. Each question may have two subdivisions only.

1020236115	Industry 4.0	L	T	P	C
THEORY		3	0	0	3

Introduction

Industry 4.0, also known as the Fourth Industrial Revolution, represents the current trend of automation and data exchange in manufacturing technologies. It integrates advanced technologies such as artificial intelligence (AI), the Internet of Things (IoT), cloud computing, and big data analytics to create "smart factories" that are highly efficient and adaptive.

Industry 4.0 is transforming the manufacturing landscape by leveraging advanced technologies to create more efficient, flexible, and intelligent production processes. For diploma engineering students, understanding these concepts is crucial as they will play a key role in the future of engineering and manufacturing. Learning Industry 4.0 will not only enhance your technical skills but also prepare you for the evolving job market in the digital age.

Course Objectives

The objective of this course is to prepare the student,

- To understand the basics of Technology of Industry 4.0 and IoT
- To learn about the Artificial Intelligence and Application Domains
- To study Robotic Process Automation and programming.
- To understand the Augmented & Virtual Reality and its applications
- To learn and evolution of IoT, Sensors, and Actuators

Course Outcomes

On successful completion of this course, the student will be able to,

CO1: Describe the Industry 4.0 technology and Industrial Internet of Things

CO2: Explain the Artificial Intelligence (AI) and Future Prospects of AI.

CO3: Explain Robotic Process Automation (RPA) for Manufacturing Industry

CO4: Describe Augmented & Virtual Reality and its Applications.

CO5: Explain the applications of IoT, Sensors, and Actuators in industries

Pre-requisites

Basic Knowledge of Industry 4.0 and its Applications

1020236115	**Industry 4.0**	L	T	P	C
THEORY		3	0	0	3

CO/PO Mapping

CO / PO	PO1	PO2	PO3	PO4	PO5	PO6	PO7
CO1	3				1		1
CO2	3				1		1
CO3	3				1		1
CO4	3				1		1
CO5	3				1		1

Legend: 3-High Correlation, 2-Medium Correlation, 1-Low Correlation

Assessment Methodology

	Continuous Assessment (40 marks)				**End Semester Examination (60 marks)**
	CA1	**CA2**	**CA3**	**CA4**	
Mode	Written test (Two units)	Written test (Another Two units)	Quiz MCQ (Online / Offline)	Model Examination	Written Examination
Duration	2 Periods	2 Periods	1 Hour	3 Hours	3 Hours
Exam Marks	50	50	60	100	100
Converted to	15	15	5	20	60
Marks	15		5	20	60
Tentative Schedule	6th Week	12th Week	13-14th Week	16th Week	

1020236115	**Industry 4.0**	L	T	P	C
THEORY		3	0	0	3

CA1 and CA2: Assessment written test should be conducted for 50 Marks for two units. The marks scored will be converted to 15 Marks. Best of one will be considered for the internal assessment of 15 Marks.

CA1and CA2, Assessment test should be conducted for two units as below.

Answer five questions (5 X 10 Marks = 50 Marks).

Eight questions will be asked, students should write Five questions. Each unit Four questions can be asked. Each question may have subdivisions. Maximum two subdivisions shall be permitted.

CA3: 60 MCQ can be asked by covering the entire portion. It may be conducted by Online / Offline. The answer scripts of every student (online / offline) for this assessment should be kept for records and future verification. The marks scored should be converted to 5 marks for the internal assessment.

CA4: Model examination should be conducted as per the end semester question pattern. The marks should be converted to 20 marks for the internal assessment.

Question Pattern:

Answer Ten questions by selecting two questions from each unit. Each question carries 10 marks each.

Four questions will be asked from every unit, students should write any two questions. The question may have two subdivisions only.

1020236115	**Industry 4.0**	L	T	P	C
THEORY		3	0	0	3

Syllabus Contents

Unit I:	**Introduction to Industry 4.0**	
Need – Reason for Adopting Industry 4.0 - Definition – Goals and Design Principles - Technologies of Industry 4.0 – Big Data – Artificial Intelligence (AI) – Industrial Internet of Things - Cyber Security – Cloud – Augmented Reality.		7
Unit II:	**Artificial Intelligence**	
Artificial Intelligence: Artificial Intelligence (AI) – What & Why? - History of AI - Foundations of AI -The AI - Environment - Societal Influences of AI - Application Domains and Tools - Associated Technologies of AI - Future Prospects of AI - Challenges of AI.		7
Unit III:	**Robotic Process Automation (RPA)**	
Robotic Process Automation (RPA): Introduction to RPA – Need for automation – Programming constructs in RPA – Robots and Softbots – RPA architecture and process methodologies - Industries best suited for RPA - Risks & Challenges with RPA.		7
Unit IV:	**Augmented & Virtual Reality**	
Augmented Reality: Definition - Tools for Augmented Reality – Hololens - Advantages and Challenges of AR - Applications of AR in Education, Industries - Mixed Reality. Virtual Reality: Definition – Types of Head Mounted Displays – Tools for Virtual Reality – Applications of VR in Education, Industries - Difference between VR and AR.		7

1020236115	**Industry 4.0**	L	T	P	C
THEORY		3	0	0	3

Unit V:	**IoT, Sensors and Actuators**
Evolution of IoT – Definition & Characteristics of IoT - Architecture of IoT – Technologies for IoT – Developing IoT Applications – Applications of IoT – Industrial IoT – Security in IoT Analog and Digital Sensors – Interfacing temperature sensor, ultrasound sensor and infrared (IR) sensor with Arduino – Interfacing LED and Buzzer with Arduino.	7
Assessment Test and Revision with Student activity	10
Total	45

Textbook:

1. Sudip Misra, Chandana roy, and Anandarup Mukherjee, Introduction to Industrial Internet of Things and Industry 4.0, Taylor & Francis India, 2021.
2. Dr Anand Kumar Singh and Dr. Manish Gangil, INDUSTRY 4.0, Shashwat Publication, 2022.
3. Alasdair Gilchrist, Industry 4.0: The Industrial Internet of Things, 1st Edition, Apress, 2017.
4. Dr Kamlesh Lakhwani, Dr Hemant Kumar Gianey, Joseph Kofi Wireko, and Kamal Kant Hiran, Internet of Things (IoT), First Edition, BPB Publications, 2020.

Website links for reference:

- https://www.youtube.com/playlist?list=PLbRMhDVUMngdcLdH4-YF1uJI4IuhcDZPR

1020236115	Industry 4.0	L	T	P	C
THEORY		3	0	0	3

END SEMESTER QUESTION PATTERN - Theory Exam

Duration: 3 Hrs. **Max. Marks: 100**

Note: Answer Ten questions by selecting two questions from each unit. Each question carries 10 marks each.

Instruction to the Question Setters

Four questions will be asked from every unit, students should write any two questions for 10 marks. The question may have two subdivisions only.

1020236116	**Additive Manufacturing**	L	T	P	C
THEORY		3	0	0	3

Introduction

This course is mainly designed to have a complete knowledge about Additive Manufacturing technologies which is a main component among the nine pillars of Industrie 4.0. This course is suitable for students opting for any pathway under Diploma in Mechanical Engineering stream. This course enhances the technical skills of students such as newer product design, testing and validation, problem solving, innovation, etc.

Course Objectives

1. To impart the knowledge of construction and working principles of additive manufacturing technologies, and their potential applications in design and manufacturing.
2. To familiarise with the materials used in AM processes and their applications

Course Outcomes

On successful completion of this course, the student will be able to,

CO1: Explain the additive manufacturing technologies and rapid prototyping
CO2: Acquire the CAD model generation procedure for the AM processes
CO3: Explain extrusion and sheet metal based AM processes
CO4: Describe photo polymerization and powder based AM processes
CO5: Enlighten the various applications of AM processes

Pre-requisites

Knowledge of basic Science, Manufacturing Processes, Machine Tool Technology

1020236116	**Additive Manufacturing**	L	T	P	C
THEORY		3	0	0	3

CO/PO Mapping

CO / PO	PO1	PO2	PO3	PO4	PO5	PO6	PO7
CO1	3	2		1	1		1
CO2	3			1			1
CO3	3			1			1
CO4	3			1			1
CO5	3			1	1		1

Legend: 3-High Correlation, 2-Medium Correlation, 1-Low Correlation

Instructional Strategy

- Prepare case study problems to the realistic situations, and real-world examples to make the sessions engaging.
- Additive Manufacturing processes can be displayed via online or offline mode to gain the interest for this course.
- Different methods of teaching such as debate and discussions can be used to enhance the students' centric learning.
- Organise demo sessions on the 3D printing machines that are available in the institution or can be call some vendor for giving demos

1020236116	**Additive Manufacturing**	L	T	P	C
THEORY		3	0	0	3

Assessment Methodology

	Continuous Assessment (40 marks)				**End Semester Examination (60 marks)**
	CA1	**CA2**	**CA3**	**CA4**	
Mode	Written test (Two units)	Written test (Another Two units)	Quiz MCQ (Online / Offline)	Model Examination	Written Examination
Duration	2 Periods	2 Periods	1 Hour	3 Hours	3 Hours
Exam Marks	50	50	60	100	100
Converted to	15	15	5	20	60
Marks	15		5	20	60
Tentative Schedule	6th Week	12th Week	13-14th Week	16th Week	

CA1 and CA2: Assessment written test should be conducted for 50 Marks for two units. The marks scored will be converted to 15 Marks. Best of one will be considered for the internal assessment of 15 Marks.

CA1and CA2, Assessment test should be conducted for two units as below.

Answer five questions (5 X 10 Marks = 50 Marks).

Eight questions will be asked, students should write Five questions. Each unit Four questions can be asked. Each question may have subdivisions. Maximum two subdivisions shall be permitted.

CA3: 60 MCQ can be asked by covering the entire portion. It may be conducted by Online / Offline. The answer scripts of every student (online / offline) for this assessment should be kept

for records and future verification. The marks scored should be converted to 5 marks for the internal assessment.

CA4: Model examination should be conducted as per the end semester question pattern. The marks should be converted to 20 marks for the internal assessment.

Question Pattern:

Answer Ten questions by selecting two questions from each unit. Each question carries 10 marks each.

Four questions will be asked from every unit, students should write any two questions. The question may have two subdivisions only.

Syllabus Contents

Unit I	**Introduction to Additive Manufacturing (AM)**	
Additive Manufacturing - Overview – Need – History – Classification – working principles (concepts only) - Materials for AM – PLA, ABS, PMMA, ceramics, composites and liquid resins – AM processes - Advantages, Limitations and Challenges– Rapid Prototyping – Rapid Tooling.		6
Unit II	**Design for Additive Manufacturing**	
Basic concept – CAD model preparation - file formats - Part orientation – Support material generation – Model slicing – honeycomb structure - Digitization techniques – Model reconstruction – Slicing software - Reverse Engineering – RE application in AM.		6
Unit III	**Extrusion and Sheet metal based Processes**	
Fused Deposition Modeling (FDM) – construction, working principle, advantages – process parameters involved - Laminated Object Manufacturing (LOM) –		6

construction, working principle, advantages - gluing and adhesive bonding - PolyJet - construction, working principle, advantages.		
Unit IV	**Photo polymerization and Powder based Processes**	
Stereolithography process (SLA) – construction, photo curable materials, working principle, advantages – Selective Laser Sintering (SLS) - construction, working principle, advantages – Electron Beam Melting (EBM) - construction, working principle, advantages – Laser Engineered Net Shaping (LENS) - construction, working principle, advantages.		6
Unit V	**Applications of Additive Manufacturing**	
Applications of Additive manufacturing technologies – new product development - after sales and service - automobile, aerospace, consumer products, health care industries – customized implants, bio-organs, bio-bones, etc.		6
Assessment Test and Revision with Student activity		15
Total		45

Suggested list of Students Activity,

- Selected topics which are relatively simpler or descriptive in nature should be given to the students for self-learning and assess the development of competency through classroom presentations.
- Mini-projects may be given to a group of students for hand-on experiences.
- Massive open online courses (MOOCs) may be used to teach various topics/subtopics.

1020236116	Additive Manufacturing	L	T	P	C
THEORY		3	0	0	3

Reference Books:

1. Chua C.K., Leong K.F., and Lim C.S., "Rapid prototyping: Principles and applications", Third Edition, World Scientific Publishers, 2010.
2. Gebhardt A., "Rapid prototyping", Hanser Gardener Publications, 2003.
3. Liou L.W. and Liou F.W., "Rapid Prototyping and Engineering applications: A tool box for prototype development", CRC Press, 2007.
4. Kamrani A.K. and Nasr E.A., "Rapid Prototyping: Theory and practice", Springer, 2006.
5. Hilton P.D. and Jacobs P.F., "Rapid Tooling: Technologies and Industrial Applications", CRC press, 2000.
6. Tom Page "Design for Additive Manufacturing" LAP Lambert Academic Publishing, 2012.

Web Reference

What is 3D printing? How does a 3D printer work? Learn 3D printing

3D Printing - Applications, Types, Process, Advantages (vajiramandravi.com)

How a 3D Printer Works and What It Is Used for (spiceworks.com)

What is 3D Printing? - Technology Definition and Types - TWI (twi-global.com)

https://home.iitk.ac.in/~nsinha/Additive_Manufacturing%20I.pdf

https://web.mit.edu/tdp/www/whatis3dp.html

Briefing Note (birmingham.ac.uk)

END SEMESTER QUESTION PATTERN - Theory Exam

Duration: 3 Hrs. **Max. Marks: 100**

Note: Answer Ten questions by selecting two questions from each unit. Each question carries 10 marks each.

Instruction to the Question Setters

Four questions will be asked from every unit, students should write any two questions for 10 marks. The question may have two subdivisions only.

1020236117	**Power Plant Engineering**	L	T	P	C
THEORY		3	0	0	3

Introduction

Electrical power is the main resource for any type of industry. Economic growth of the nation essentially results in growth in the power sector. Various conventional power plants such as Hydro, Gas, Thermal, Diesel and Nuclear power plants are employed for power generation. Most of the power plants use Mechanical Engineering equipment and components. Hence, this course attempts to provide the basic knowledge of the components, operation and maintenance of power plants to the students and would also acquaint them with the latest technological advances taking place in this sector.

Course Objectives

The objective of this course is to enable the student to apply knowledge of mechanical engineering related to power generation systems, their control and economics in different types of power plants for their operation and maintenance.

Course Outcomes

On successful completion of this course, the student will be able to

CO1: Analyze economics of power plants and list factors affecting the power plants and interpret the performance of power plants based on load variations

CO2: Identify elements and their functions and operation of thermal power plants.

CO3: Identify elements and their functions of hydro, Solar and wind power plant.

CO4: Identify elements and their functions and operations of nuclear power plants

CO5: Identify elements and their functions and operations of diesel and gas turbine power plants

Pre-requisites

Knowledge of Mathematics, Thermal Engineering, Mechanics of machines, Workshop technology, Fluid mechanics and fluid power.

1020236117	**Power Plant Engineering**	L	T	P	C
THEORY		3	0	0	3

CO/PO Mapping

CO / PO	PO1	PO2	PO3	PO4	PO5	PO6	PO7
CO1	1	1	1	2	3	3	3
CO2	1	2	1	2	3	3	3
CO3	2	2	1	1	3	3	3
CO4	1	1	1	2	2	3	3
CO5	1	2	1	2	2	3	3

Legend: 3-High Correlation, 2-Medium Correlation, 1-Low Correlation

Instructional Strategy

1. The instructional strategy for teaching Powerplant Engineering in polytechnic colleges emphasizes practical application and industry relevance.
2. Through a curriculum aligned with the state technical education board, the syllabus is broken down into manageable units, prioritizing topics pertinent to Indian engineering contexts.
3. About 15 – 20% of the topics/ sub-topics which are relatively simpler or descriptive in nature is to be given to the students for self-directed learning and assess the development of the Cos through classroom presentations.
4. Before starting practical, the teacher should demonstrate the working of a power plant.
5. Show video/ animation films to explain the functioning of various power plants.

1020236117	**Power Plant Engineering**	L	T	P	C
THEORY		3	0	0	3

Assessment Methodology

	Continuous Assessment (40 marks)				**End Semester Examination (60 marks)**
	CA1	**CA2**	**CA3**	**CA4**	
Mode	Written test (Two units)	Written test (Another Two units)	Quiz MCQ (Online / Offline)	Model Examination	Written Examination
Duration	2 Periods	2 Periods	1 Hour	3 Hours	3 Hours
Exam Marks	50	50	60	100	100
Converted to	15	15	5	20	60
Marks	15		5	20	60
Tentative Schedule	6th Week	12th Week	13-14th Week	16th Week	

CA1 and CA2: Assessment written test should be conducted for 50 Marks for two units. The marks scored will be converted to 15 Marks. Best of one will be considered for the internal assessment of 15 Marks.

CA1and CA2, Assessment test should be conducted for two units as below.

Answer five questions (5 X 10 Marks = 50 Marks).

Eight questions will be asked, students should write Five questions. Each unit Four questions can be asked. Each question may have subdivisions. Maximum two subdivisions shall be permitted.

CA3: 60 MCQ can be asked by covering the entire portion. It may be conducted by Online / Offline. The answer scripts of every student (online / offline) for this assessment should be kept

for records and future verification. The marks scored should be converted to 5 marks for the internal assessment.

CA4: Model examination should be conducted as per the end semester question pattern. The marks should be converted to 20 marks for the internal assessment.

Question Pattern:

Answer Ten questions by selecting two questions from each unit. Each question carries 10 marks each.

Four questions will be asked from every unit, students should write any two questions. The question may have two subdivisions only.

Syllabus Contents

Unit I	**INTRODUCTION & ECONOMICS OF POWER PLANT**	
Power plant-Introduction, Classification - Location of power plant- Choice of Power plant-Terminology used in power plant: Peak load, Base load, Load factor, Load curve, demand factor- Various factor affecting the operation of power plant- Load sharing- cost of power tariff methods-factors involved in fixing of a tariff.		7
UNIT II	**THERMAL POWER PLANT**	
Thermal power plant -General layout – working-Site Selection– materials required for thermal power plant - High Pressure Boilers and classification - coal handling and its methods, stages in coal storage- Fuel burning-Stoker firing-overfeed stoker –underfeed stokers-chain grate stoker, Pulverized fuel handling system-Pulverization of coal-Ash handling system- Gravity system- electrostatic precipitation (ESP) system-Advantages and disadvantages-limitations of Thermal power plant.		7

1020236117	**Power Plant Engineering**	L	T	P	C
THEORY		3	0	0	3

UNIT III	**POWER FROM RENEWABLE ENERGY**
Hydroelectric power plant- Introduction, storage and poundage, Selection of sites for hydroelectric power plant-General layout and essential elements of Hydroelectric power plant and its working- Advantages and limitations of hydroelectric power plant. Solar power plant-Introduction-layout, Solar cell fundamentals & classification – maximum power point tracker (MPPT) and solar panel. Wind power plant: Introduction, -Factors affecting distribution of Wind energy, Variation of wind speed with height and time-Horizontal axis wind turbine (HAWT)-types of rotors-Vertical axis wind turbine- types of rotors- advantages and limitations of Wind power plant.	7
UNIT IV	**NUCLEAR POWER PLANT**
Nuclear power plant-introduction-nuclear fuels, nuclear fission and fusion, working of a nuclear power plant, types of reactors- pressurized water reactor- boiling water reactor- CANDU type reactor – fast breeder reactor - effect of nuclear radiation- different methods for nuclear waste disposal-low, medium and high-level waste disposal, Advantages -disadvantages- limitations- Safety measures for Nuclear Power plants.	7
UNIT V	**DIESEL POWER PLANT AND GAS TURBINE POWER PLANT**
Diesel power plant- layout -Components and the working- Advantages -disadvantages- limitations. Gas turbine power plant- Schematic diagram & working of open and closed cycle gas turbine power plant, Components of Gas turbine–compressor, combustion chamber, gas turbine, vortex blading, gas turbine fuels, Gas turbine power plants in India- Advantages -disadvantages- limitations of Gas turbine power plant.	7
Revision + Test	10
Total	45

1020236117	Power Plant Engineering	L	T	P	C
THEORY		3	0	0	3

Suggested list of Students Activity,

Other than classroom learning, the following are the suggested student related co-curricular activities which can be undertaken to accelerate the attainment of the various outcomes in this course.

1. Students are advised to visit a nearby power plant to understand more about the subject and prepare a report consisting of
   a) Various advanced systems
   b) Various Standards
   c) Maintenance of components of power plant observed
2. Prepare/ Download the specifications of followings:
   a) Steam Power plant equipment and elements
   b) Gas turbine Power plant equipment and elements
   c) Hydro Power plant equipment and elements
   d) Diesel Power plant equipment and elements

Reference Books:

1. Power plant engineering, G. R. Nagpal, Khanna publishers.
2. Power plant engineering, Arora and Domkundwar, Dhanpat rai & CO (P) LTD.
3. Power Plant Engineering, Dr. P. C. Sharma, S. K. Kataria & Sons Publications.
4. Power plant engineering, P. K. Nag, McGraw Hill India.
5. A Text Book of Power Plant Engineering, R K Rajput, Laxmi Publications.

Web reference

- https://www.youtube.com/playlist?list=PLLy_2iUCG87BT8H9uMufjrcPF5e6Qd2bz
- https://www.youtube.com/watch?v=3dJAtHaSQ98
- https://www.youtube.com/watch?v=kbuLfXgw4Gs
- https://www.youtube.com/watch?v=68-o35vWTAc
- https://www.youtube.com/watch?v=vrp0ptd03mg

END SEMESTER QUESTION PATTERN - Theory Exam

Duration: 3 Hrs. **Max. Marks: 100**

Note: Answer Ten questions by selecting two questions from each unit. Each question carries 10 marks each.

Instruction to the Question Setters

Four questions will be asked from every unit, students should write any two questions for 10 marks. The question may have two subdivisions only.

1020236241	MEP Equipment Servicing	L	T	P	C
PRACTICUM		1	0	4	3

Introduction:

MEP Equipment servicing is required in a large number of commercial and industrial applications. This content would be useful in identifying the defects and servicing of MEP equipments. The knowledge and skill of various equipments of HVAC systems, electrical systems and plumbing systems will be very useful in maintaining MEP systems in commercial buildings

Course Objectives:

- To know the types of equipment's in HVAC systems.
- To know the functions of HVAC systems, electrical systems and plumbing systems.
- Practice with servicing of HVAC equipment in the industry.
- Describe the procedure for maintaining of MEP equipment.
- Practicing and servicing of electrical and plumbing equipment.

Course Outcomes

On successful completion of this course the student will be able to,

CO 1 : Describe the working of HVAC equipment in the industry.

CO 2 : Explain the function of electrical equipments and their periodic maintenance.

CO 3 : Describe the functions of plumbing systems and their service procedure

CO 4 : Demonstrate the skills in identifying and rectifying the defects in MEP equipments.

CO 5 : Explain the service procedure for MEP equipments in the industry.

Pre-requisites:

Thermodynamics, fundamentals of refrigeration and air-conditioning, functions of HVAC components

1020236241	MEP Equipment Servicing	L	T	P	C
PRACTICUM		1	0	4	3

CO/PO Mapping

CO / PO	PO1	PO2	PO3	PO4	PO5	PO6	PO7
CO1	1			3			
CO2	1			3			
CO3	1			3			
CO4	1			3			
CO5	1			3			

Legend: 3-High Correlation, 2-Medium Correlation, 1-Low Correlation

Instructional Strategy:

- Engage and Motivate: Instructors should actively engage students to boost their learning confidence.
- Real-World Relevance: Incorporate relatable, real-life examples and engineering applications to help students understand and appreciate course concepts.
- Interactive Learning: Utilize demonstrations and plan interactive student activities for an engaging learning experience.
- Application-Based Learning: Employ a theory-demonstrate-practice-activity strategy throughout the course to ensure outcome-driven learning and employability.
- Simulation and Real-World Practice: Conduct demonstrations and hands-on activities in a simulated environment, transitioning to real-world scenarios when possible.
- Encourage Critical Analysis: Foster an environment where students can honestly assess experiment outcomes and analyse potential sources of error in case of discrepancies

1020236241	MEP Equipment Servicing	L	T	P	C
PRACTICUM		1	0	4	3

Assessment Methodology:

	Continuous Assessment (40 marks)				End Semester Examination (60 marks)
	CA1	**CA2**	**CA3**	**CA4**	
Mode	Practical Test	Practical Test	Written Test Theory	Practical Test	Practical Examination
Portion	Cycle I Exercises	Cycle II Exercises	All Portions	All Exercises	All Exercises Experiments
Duration	2 Periods	2 Periods	3 Hours	3 Hours	3 hours
Exam Marks	60	60	100	100	100
Converted to Marks	10	10	15	15	60
Marks	10		15	15	60
Tentative Schedule	7th Week	14th Week	15th Week	16th Week	

Note:

CA1 and CA2: All the exercises/experiments should be completed as per the portions above and kept for the practical test. The students shall be permitted to select any one by lot for the test. The practical test should be conducted as per the scheme of evaluation as below. The marks awarded shall be converted to 10 Marks for each assessment test. Best of one will be considered for the internal assessment of 10 Marks.

Practical documents should be maintained for every experiment immediately after completion of the practice. The practical document should be submitted for the practical test. The same should be evaluated for 10 Marks for each exercise/experiment. The total

marks awarded should be converted to 10 Marks for the practical test as per the scheme of evaluation as below.

The details of the documents to be prepared as per the instruction below.

Each exercise should be completed on the day of practice. The same shall be evaluated for 10 marks on the day or next day of practice before commencement of the next experiment.

This documentation can be carried out in a separate notebook or a printed manual or a file with documents. The Procedure, Sketch and Result / Output should be written by the student manually in the documents.

The detailed date of the practices and its evaluations should be maintained in the course logbook. The log book and the practical documents should be submitted for the verification by the Flying Squad and DoTE Official.

SCHEME OF EVALUATION

PART	DESCRIPTION	MARKS
A	Aim & Tools required	10
B	Procedure / Sketch / Setting / Tool Handling	20
C	Adjustment / Dismantling / Assembling	20
TOTAL		50
D	Practical Documents (As per the portions)	10
		60

Cycle - I - Exercise 1, 2, 3,4 and 5.

Cycle - II - Exercise 6, 7, 8, 9 and 10.

CA 3: Written Test for complete theory portions should be conducted for 100 Marks as per the question pattern below. The marks scored will be converted to 15 Marks for internal assessment.

1020236241	MEP Equipment Servicing	L	T	P	C
PRACTICUM		1	0	4	3

Question pattern – Written Test Theory

Description		**Marks**	
Part – A	30 MCQ Questions.	30 X 1 Mark	30 Marks
Part – B	7 Questions to be answered out of 10 Questions.	7 X 10 Marks	70 Marks
TOTAL			100 Marks

CA 4: All the exercises/experiments should be completed and kept for the practical test. The students shall be permitted to select any one by lot for the test. The practical test should be conducted as per the scheme of evaluation below. After completion of all the exercises the practical test should be conducted as per End Semester Examination question pattern scheme of evaluation. The marks awarded should be converted to 15 Marks for the internal assessment.

SCHEME OF EVALUATION

Model Practical Examination and End Semester Examination - Practical Exam

PART	**DESCRIPTION**	**MARKS**
A	Aim & Tools required	10
B	Procedure / Sketch / Setting / Tool Handling	20
C	Adjustment / Dismantling / Assembling	20
D	Troubles / Report	10
E	Written test (MCQ)	30
F	Viva Voce	10
TOTAL		100

Note: For the written test 30 MCQ shall be asked from the theory portions.

1020236241	MEP Equipment Servicing	L	T	P	C
PRACTICUM		1	0	4	3

Syllabus Contents

Theory Portion - Unit – I	
Basic concept of thermodynamics – heat – temperature – pressure. Introduction of central plant air conditioning – DX system – Chilled water system – Air handling unit – fan coil unit – chilled water pump - water cooled chiller – air cooled chiller – cooling tower – construction and working – Maintenance schedule – servicing procedure	9
Practical Exercises	
Exercise 1: Water heater a. Drain your tank and remove sediment. b. Check your anode rod regularly, as it's an important part of the water heater. c. If you notice your water heater leaking, it may be caused by a loose drain valve. Tighten with a wrench until snug. d. Test the temperature release valve. e. Insulate its pipes and the heater.	5
Exercise 2: Water pump a. Dismantle and assemble a pump from the chilled water pipe line. b. Dismantle and assemble of pump casing c. Alignment of pump-motor shaft	
Exercise 3: Cooling Tower a. Check the fan motor assembly b. Align the fan motor assembly c. Check the float valve operation d. Check the water nozzles and replace if blocked.	5
Exercise 4: Plumbing pump a. Dismantling and assembly of pump casing b. Check and replace shaft seal c. Check and replace impeller	5

1020236241	MEP Equipment Servicing	L	T	P	C
PRACTICUM		1	0	4	3

Exercise 5: Fire Fighting pumps a. Check automatic start by opening a test line to reduce system pressure b. Verify that relief valves operate properly c. Check the fuel tank level for diesel pump d. Check the oil and fuel filter in the diesel engine e. Check the battery	5

Theory Portion - Unit – II	
Electrical system – basics of electricity – electrical equipments – generator – transformer – water heater – working and construction – servicing and maintenance procedure Plumbing system – basics of fluid flow – hot and cold water – drainage system – water treatment plant – pumps – valves – strainer - servicing and maintenance procedure.	6
Practical Exercises	
Exercise 6: Cleaning AC Unit. a. Filter cleaning b. Cooling coil cleaning c. Blower cleaning d. Condenser coil cleaning e. Condenser fan cleaning	5
Exercise 7: Checking AC unit a. Checking refrigerant pressure b. Check the drier . c. Check the compressor. d. Check the temperature control. e. Check the supply air flow rate and temperature	5

1020236241	MEP Equipment Servicing	L	T	P	C
PRACTICUM		1	0	4	3

Exercise 8: Transformer a. Check the transformer oil level and top up if required b. Clean the breather. c. Check the bushing filled with oil to check oil level d. Check the leakage of oil from any point e. Check the oil pump f. Check air fan	5
Exercise 9: Genset (Engine Generator) a. Test Batteries b. Check intake and exhaust c. Inspect wiring / electrical system	5
Exercise 10: Genset (Engine Generator) a. Check filters and replace if necessary b. Check oil and replace as recommended c. Check fuel filter and replace if blocked d. Check and replace spark plugs	5
Assessment Test and Revision	10
Total	75

Text and Reference Books:

1. ASHRAE Hand book Heating, Ventilating, and Air-Conditioning SYSTEMS AND EQUIPMENT
2. The Institute of Plumbing – Plumbing Engineering Services Design Guide
3. Principles of Electrical Engineering and Electronics by V.K Mehta and Rohit Mehta

Web References

- https://www.youtube.com/watch?v=PVGWHysJj78
- https://www.youtube.com/watch?v=yEzCvjQ2sNY
- https://www.youtube.com/watch?v=q-Oooe0G7_c
- https://www.youtube.com/watch?v=Ct1WnU-q9Qs
- https://www.youtube.com/watch?v=-5ccNAHF7I8

1020236241	MEP Equipment Servicing	L	T	P	C
PRACTICUM		1	0	4	3

- https://www.youtube.com/watch?v=f0tKsDjWgT8
- https://www.youtube.com/watch?v=KTn2khCDqyw
- https://www.youtube.com/watch?v=8jxRn-T_LCs
- https://www.youtube.com/watch?v=cDnrpCX58bQ
- https://www.youtube.com/watch?v=_FyePOpQkNo
- https://www.youtube.com/watch?v=3Z7cEPQGX3E
- https://www.youtube.com/watch?v=ouKCbxuW4r4

Equipment / Facilities required to conduct the Practical Course.

MEP Equipment List

1. Generator
2. Fire pumps
3. Sump pumps
4. Water treatment plant
5. Plumbing pumps, valves and strainer
6. Exhaust fans
7. Dx AC units
8. PAC units
9. Air cooled chiller
10. Water cooled chiller
11. Chilled water pumps
12. Cooling tower
13. Condenser water pumps
14. Air separator

Based on the requirement the quantity should be kept.

1020236241	MEP Equipment Servicing	L	T	P	C
PRACTICUM		1	0	4	3

END SEMESTER EXAMINATION - Practical Exam

Note:

All the exercises should be completed before the Board Practical Examinations. End Semester Practical examination should be conducted for all the exercises / experiments for 100 Marks. Students will be permitted to select any one exercise by lot or question paper supplied by the DOTE Exam section shall be used. The practical document prepared by the student should be submitted with a Bonafide Certificate.

SCHEME OF EVALUATION

Part	Description	Marks
A	Aim & Tools required	10
B	Procedure / Sketch / Setting / Tool Handling	20
C	Adjustment / Dismantling / Assembling	20
D	Troubles / Report	10
E	Written test (Theory Portions)	30
F	Viva Voce	10
	TOTAL MARKS	100

Note: For the written test 30 MCQ shall be asked from the theory portions.

1020236242	**Maintenance of Machine Tools**	L	T	P	C
PRACTICUM		1	0	4	3

Introduction:

Diploma technocrats who are in the field of maintenance of machine tools should have a thorough knowledge about the dismantling and assembly procedure, installation, maintenance and repair of the machines and know about the technology used for the prediction of premature failure of components in advance.

Course Objectives:

- To know the instruments used for maintenance
- To know the advanced maintenance techniques of machine tools to increase the duration of life of the machines.
- To know the procedure for dismantling and assembly of equipment.
- To know the instruments used for machine tool testing.
- To know the different alignment techniques and accuracy of machine tools.

Course Outcomes

CO1: Setup instrument for machine tool maintenance.

CO2: Acquire knowledge of maintenance and troubleshooting of Machines and its components

CO3: Acquire knowledge for dismantling and assembly of equipment's

CO4: Setup instrument for machine tool testing

CO5. Acquire knowledge on machine tool alignment and the manufacturing accuracy of machine tools.

Pre-requisites:

Basic workshop practice, Workshop practices, Machine Tool Technology

1020236242	**Maintenance of Machine Tools**	L	T	P	C
PRACTICUM		1	0	4	3

CO/PO Mapping

CO / PO	PO1	PO2	PO3	PO4	PO5	PO6	PO7
CO1	3			3			3
CO2	3	3		3		3	3
CO3	3	3		3		3	3
CO4	3			3			3
CO5	3	3		3		3	3

Legend: 3-High Correlation, 2-Medium Correlation, 1-Low Correlation

Instructional Strategy:

- Engage and Motivate: Instructors should actively engage students to boost their learning confidence.
- Real-World Relevance: Incorporate relatable, real-life examples and engineering applications to help students understand and appreciate course concepts.
- Interactive Learning: Utilize demonstrations and plan interactive student activities for an engaging learning experience.
- Application-Based Learning: Employ a theory-demonstrate-practice-activity strategy throughout the course to ensure outcome-driven learning and employability.
- Simulation and Real-World Practice: Conduct demonstrations and hands-on activities in a simulated environment, transitioning to real-world scenarios when possible.
- Encourage Critical Analysis: Foster an environment where students can honestly assess experiment outcomes and analyse potential sources of error in case of discrepancies

1020236242	**Maintenance of Machine Tools**	L	T	P	C
PRACTICUM		1	0	4	3

Assessment Methodology:

	Continuous Assessment (40 marks)				**End Semester Examination (60 marks)**
	CA1	**CA2**	**CA3**	**CA4**	
Mode	Practical Test	Practical Test	Written Test Theory	Practical Test	Practical Examination
Portion	Cycle I Exercises	Cycle II Exercises	All Portions	All Exercises	All Exercises Experiments
Duration	2 Periods	2 Periods	3 Hours	3 Hours	3 hours
Exam Marks	60	60	100	100	100
Converted to Marks	10	10	15	15	60
Marks	10		15	15	60
Tentative Schedule	7th Week	14th Week	15th Week	16th Week	

Note:

- **CA1 and CA2:** All the exercises/experiments should be completed as per the portions above and kept for the practical test. The students shall be permitted to select any one by lot for the test. The practical test should be conducted as per the scheme of evaluation as below. The marks awarded shall be converted to 10 Marks for each assessment test. Best of one will be considered for the internal assessment of 10 Marks.

  Practical documents should be maintained for every experiment immediately after completion of the practice. The practical document should be submitted for the practical test. The same should be evaluated for 10 Marks for each exercise/experiment. The total

marks awarded should be converted to 10 Marks for the practical test as per the scheme of evaluation as below.

The details of the documents to be prepared as per the instruction below.

Each exercise should be completed on the day of practice. The same shall be evaluated for 10 marks on the day or next day of practice before commencement of the next experiment.

This documentation can be carried out in a separate notebook or a printed manual or a file with documents. The Procedure, Sketch and Report / Output should be written by the student manually in the documents.

The detailed date of the practices and its evaluations should be maintained in the course logbook. The log book and the practical documents should be submitted for the verification by the Flying Squad and DoTE Official.

SCHEME OF EVALUATION

PART	DESCRIPTION	MARKS
A	Dismantling / Procedure	20
B	Troubleshooting procedure/ Geometrical test	20
C	Assembling & Inspection Report / Test Chart	10
TOTAL		50
D	Practical Documents (As per the portions)	10
Total Marks		60

Cycle - I - Exercise 1, 2, 3,4 and 5.

Cycle - II - Exercise 6, 7, 8, 9 and 10.

CA 3: Written Test for complete theory portions should be conducted for 100 Marks as per the question pattern below. The marks scored will be converted to 15 Marks for internal assessment.

1020236242	Maintenance of Machine Tools	L	T	P	C
PRACTICUM		1	0	4	3

Question pattern – Written Test Theory

Description		**Marks**	
Part – A	30 MCQ Questions.	30 X 1 Mark	30 Marks
Part – B	7 Questions to be answered out of 10 Questions.	7 X 10 Marks	70 Marks
TOTAL			100 Marks

- **CA 4:** All the exercises/experiments should be completed and kept for the practical test. The students shall be permitted to select any one by lot for the test. The practical test should be conducted as per the scheme of evaluation below. After completion of all the exercises the practical test should be conducted as per End Semester Examination question pattern scheme of evaluation. The marks awarded should be converted to 15 Marks for the internal assessment.

SCHEME OF EVALUATION

Model Practical Examination and End Semester Examination - Practical Exam

PART	**DESCRIPTION**	**MARKS**
A	Aim & Tools Required	10
B	Dismantling / Procedure	20
C	Troubleshooting procedure/ Geometrical test	20
D	Assembling & Inspection Report / Test Chart	10
E	Written Test (Theory Portion)	30
F	Viva Voce	10
TOTAL		100

Note: For the written test 30 MCQ shall be asked from the theory portions.

1020236242	Maintenance of Machine Tools	L	T	P	C
PRACTICUM		1	0	4	3

Syllabus Contents

Theory Portion	
MAINTENANCE ACTIVITY OF MACHINE TOOLS: Maintenance: Objective-Definition –Types of maintenance-Advantages of good maintenance-Disadvantages of bad maintenance-Instruments needed for maintenance. Maintenance of Lathe: Lathe maintenance-Drive belts- Adjusting belt tension, Gib adjustment(cross slide, Compound slide),Wiper pads, Adjusting the Tailstock clamp. **TESTING OF MACHINE TOOLS** Measuring Equipment and Tools used for testing of machine tools: Dial gauges – test mandrels – straight edges - squares- spirit levels- level measurement by water level- alignment by wire and measuring microscope. DETAILS FOR TESTING VARIOUS MACHINE TOOLS: Machine tool testing purpose-Types of geometrical checks on machine tools-Various test conducted on machine tools-Alignment test on lathe, surface grinding and milling machine.	15
Practical Exercises	
Maintenance:	
Exercise 1: Lathe maintenance-Drive belts- Adjusting belt tension, Gib adjustment (cross slide,Compound slide), Wiper pads checking, Adjusting the Tailstock clamp.	5
Exercise 2: Slotter maintenance- Diving Pulley alignment checking-Belt tension adjustment –Pinion gear inspection , table jib adjustment.	5
Exercise 3: Practice on oil removing & filling for a gear box. Inspection of the drained oil for contaminants & wear debris with focus on visual inspection. Preparation of coolants.	5
Exercise 4: Drawing and drafting of machine part as per requirement (in case of worn out/ modification)	5

1020236242	**Maintenance of Machine Tools**	L	T	P	C
PRACTICUM		1	0	4	3

Exercise 5: Dismantle, inspect and assemble the Lead screw and Half nut of the lathe.	5
Exercise 6: Dismantle, inspect and assemble the Three jaw chuck./Four jaw chuck	5
Exercise 7: Dismantle, inspect and assemble the Drill chuck.	5
Exercise 8: Surface roughness measurement on a machined component.	5
Machine Tool Alignment :	
Exercise 9: Conduct the following test for the surface grinding machine with horizontal grinding wheel spindle and prepare a test chart. a. Check the level of work table in longitudinal and transverse direction. b. Check the T-slots parallel with table movement. c. Check the T-slots square with transverse movement of table. d. Check the wheel spindle for true running and axial slip. e. Check the wheel spindle parallel with surface of table.	5
Exercise 10: Conduct the following test for the horizontal milling machine and prepare a test chart. a. Check the flatness of the work table surface in longitudinal and transverse direction b. Check the true running of the internal taper of main spindle c. Check the parallelism of the clamping surface of the work table in its longitudinal motion. d. Check the parallelism of the transverse movement of the work table to the main spindle in vertical and horizontal plane. e. Check the squareness of the table surface with column face.	5
Assessment Test and Revision	10
Total	75

1020236242	**Maintenance of Machine Tools**	L	T	P	C
PRACTICUM		1	0	4	3

Suggested List of Students Activity:

1. Students can visit the industry and workshops nearby and observe how the maintenance of machine tools were done.
2. Study the alignment test on machine tools such as Drilling and shaping.

Text and Reference Books:

1. Er.Sushil kumar Srivastava - Maintenance Engineering - Reprint2016 - S.Chand publication.
2. Georg Schlesinger, F. Koenigsberger , M. Burdekin - TESTING MACHINE TOOLS - 8th edition- Pergamon Press-1978.
3. K.J.Bag- Preventive Maintenance - ISTE Professional centre continuing education Programme- Distributed by ISTE Professional centre AnnaUniversity campus, Chennai.

Web-based/Online Resources:

- https://www.youtube.com/watch?v=f58SW0Hwcf0 –Principle of Maintenance –NPTEL-IIT Kharagpur

1020236242	Maintenance of Machine Tools	L	T	P	C
PRACTICUM		1	0	4	3

END SEMESTER EXAMINATION - Practical Exam

Note:

All the exercises should be completed before the Board Practical Examinations. End Semester Practical examination should be conducted for all the exercises / experiments for 100 Marks. Students will be permitted to select any one exercise by lot or question paper supplied by the DOTE Exam section shall be used. The practical document prepared by the student should be submitted with a Bonafide Certificate.

SCHEME OF EVALUATION

PART	DESCRIPTION	MARKS
A	Aim & Tools Required	10
B	Dismantling / Procedure	20
C	Troubleshooting procedure/ Geometrical test	20
D	Assembling & Inspection Report / Test Chart	10
E	Written Test (Theory Portions)	30
F	Viva Voce	10
TOTAL		100

Note: For the written test 30 MCQ shall be asked from the theory portions.

1020236242	Maintenance of Machine Tools	L	T	P	C
PRACTICUM		1	0	4	3

Equipment / Facilities required to conduct the Practical Course.

S.No	Name of the Equipment's	Quantity Required
1.	Lathe machine	1 No
2.	Surface grinding machine	1 No
3.	Milling machine	1 No
4.	Slotting Machine	1 No
5.	Surface roughness tester	1 No
6.	Lead screw and nut	1 No
7.	Three jaw chuck/ Four jaw chuck	1 No
8.	Drill chuck	1 No
9.	Dial gauge	5 Nos.
10.	Magnetic stand	5 Nos.
11.	Surface gauges	5 Nos.
12.	Spirit level	5 Nos.
13.	Spanners (DE/Ring/Box)	Sufficient quantity
14.	Screw drivers	Sufficient quantity
15.	Allen screw sets	Sufficient quantity
16.	Hammer	Sufficient quantity
17.	Test mandrels	Sufficient quantity
18.	Squares / Blocks	Sufficient quantity

1020236243	NON DESTRUCTIVE TESTING	L	T	P	C
PRACTICUM		1	0	4	3

Introduction:

Non-destructive testing (NDT)is a multidisciplinary profession that blends quality assurance and materials science. NDT is used to inspect and evaluate materials, components, or assemblies without destroying their serviceability. Through a set of test methods, skilled technicians identify cracks, voids, inclusions, and weld discontinuities, as well as identify misassembled subcomponents. This makes NDT crucial to help prevent catastrophic failures such as airplane and locomotive crashes, pipeline leaks and explosions, nuclear reactor failures, and ship disasters.

Course Objectives:

The objective of this course is to prepare the student,

- To learn about the various Non Destructive testing methods.
- To identify the types of equipment used for each Non-Destructive and Destructive Examination.
- To study about the process of Surface Testing Methods(LPT & MPT)
- To learn about the Sub Surface Testing methods(RT & UT)
- To study about the various applications of NDT Tests in Industries.

Course Outcomes

CO1: Explain NDT techniques which enable it to carry out various inspections in accordance with the established procedures.

CO2: Calibrate the instrument and inspect for in-service damage in the components.

CO3: Differentiate various defect types and select the appropriate NDT methods for better evaluation.

CO4: Communicate their conclusions clearly to specialist and non-specialist audiences.

CO5: Prepare the testing and evaluation of the results for further analysis.

Pre-requisites:

Knowledge of basic measuring instruments, material processing, and various types of materials defects.

1020236243	NON DESTRUCTIVE TESTING	L	T	P	C
PRACTICUM		1	0	4	3

CO/PO Mapping

CO / PO	PO1	PO2	PO3	PO4	PO5	PO6	PO7
CO1	3	-	-	3	-	-	-
CO2	3	-	-	3	-	-	-
CO3	3	-	-	3	-	-	-
CO4	3	-	-	3	-	-	-
CO5	3	-	-	3	-	-	-

Legend: 3-High Correlation, 2-Medium Correlation, 1-Low Correlation

Instructional Strategy:

- It is advised that teachers take steps to pique pupils' attention and boost their curiosity to learn.
- Implement task-based learning activities where students work on specific tasks or projects.
- Incorporate technology tools and resources, such as online platforms, interactive multimedia, and virtual communication tools, to enhance engagement and provide additional practice opportunities.
- Incorporate formative and summative assessments to gauge student progress and provide targeted feedback.
- Throughout the course, a theory-demonstrate-practice-activity strategy may be used to ensure that learning is outcome and employability based.
- All demonstrations/Hand-on practices may be followed in the real environment as far as possible.

1020236243	NON DESTRUCTIVE TESTING	L	T	P	C
PRACTICUM		1	0	4	3

Assessment Methodology:

	Continuous Assessment (40 marks)				End Semester Examination (60 marks)
	CA1	**CA2**	**CA3**	**CA4**	
Mode	Practical Test	Practical Test	Written Test Theory	Practical Test	Practical Examination
Portion	Cycle I Exercises	Cycle II Exercises	All Portions	All Exercises	All Exercises Experiments
Duration	2 Periods	2 Periods	3 Hours	3 Hours	3 hours
Exam Marks	60	60	100	100	100
Converted to Marks	10	10	15	15	60
Marks	10		15	15	60
Tentative Schedule	7th Week	14th Week	15th Week	16th Week	

Note:

CA1 and CA2: All the exercises/experiments should be completed as per the portions above and kept for the practical test. The students shall be permitted to select any one by lot for the test. The practical test should be conducted as per the scheme of evaluation as below. The marks awarded shall be converted to 10 Marks for each assessment test. Best of one will be considered for the internal assessment of 10 Marks.

Practical documents should be maintained for every experiment immediately after completion of the practice. The practical document should be submitted for the practical test. The same should be evaluated for 10 Marks for each exercise/experiment. The total marks awarded should be converted to 10 Marks for the practical test as per the scheme of evaluation as below.

1020236243	NON DESTRUCTIVE TESTING	L	T	P	C
PRACTICUM		1	0	4	3

The details of the documents to be prepared as per the instruction below.

Each exercise should be completed on the day of practice. The same shall be evaluated for 10 marks on the day or next day of practice before commencement of the next experiment.

This documentation can be carried out in a separate notebook or a printed manual or a file with documents. The Procedure, Sketch and Result / Output should be written by the student manually in the documents.

The detailed date of the practices and its evaluations should be maintained in the course logbook. The log book and the practical documents should be submitted for the verification by the Flying Squad and DoTE Official.

SCHEME OF EVALUATION

PART	DESCRIPTION	MARKS
A	Procedure / Preparation	15
B	Observation / Sketch	20
C	Accuracy	15
TOTAL		50
D	Practical Documents (As per the portions)	10
		60

Cycle - I - Exercise 1, 2, 3 and 4.

Cycle - II - Exercise 5, 6, 7 and 8..

CA 3: Written Test for complete theory portions should be conducted for 100 Marks as per the question pattern below. The marks scored will be converted to 15 Marks for internal assessment.

1020236243	NON DESTRUCTIVE TESTING	L	T	P	C
PRACTICUM		1	0	4	3

Question pattern – Written Test Theory

Description		**Marks**	
Part – A	30 MCQ Questions.	30 X 1 Mark	30 Marks
Part – B	7 Questions to be answered out of 10 Questions.	7 X 10 Marks	70 Marks
TOTAL			100 Marks

CA 4: All the exercises/experiments should be completed and kept for the practical test. The students shall be permitted to select any one by lot for the test. The practical test should be conducted as per the scheme of evaluation below. After completion of all the exercises the practical test should be conducted as per End Semester Examination question pattern scheme of evaluation. The marks awarded should be converted to 15 Marks for the internal assessment.

SCHEME OF EVALUATION

Model Practical Examination and End Semester Examination - Practical Exam

PART	**DESCRIPTION**	**MARKS**
A	Procedure/Preparation	15
B	Observation/Drawing	20
C	Accuracy	15
D	Result	10
E	Written Test	30
F	Viva Voce	10
TOTAL		100

Note: For the written test 30 MCQ shall be asked from the theory portions.

1020236243	NON DESTRUCTIVE TESTING	L	T	P	C
PRACTICUM		1	0	4	3

Syllabus Contents

Theory Portion - Unit I	
Introduction: Non destructive testing (NDT) and its comparison with destructive testing, Defects/ flaws due to primary processing, secondary processing and inservice, Types of defects determined by NDT, Common non-destructive testing techniques, Advantages, limitations and applications of NDT. **Visual Inspection:** Principle of visual Inspection, Defects which can be detected by unaided visual Inspection, Optical aids used for visual inspection, Advantages and limitations of visual inspection. **Liquid Penetrant Test:** Advantages and limitations of Liquid Penetrant Test (LPT), Physical principles of LPT, Procedure employed for LPT, Penetrant methods, Materials used in LPT. **Magnetic Particle Test:** Advantages and limitations of Magnetic Particle Test (MPT), Procedure of MPT, Magnetizing Magnetic particles and suspending liquids, Detectable discontinuities, Non-relevant indications, Applications.	8
Practical Exercises	
Exercise 1: Detect the cracks in the specimen using Visual Inspection and ring test.	6
Exercise 2: Detect the Small surface flaws in the specimen using Microscopy Examination test.	6
Exercise 3: Detect the Subsurface flaws in the specimen using Radiography.	6
Exercise 4: Detecting Surface flaws in specimen using Die-penetration test.	6
Theory Portion - Unit II	
Eddy Current Test: Advantages and limitations of Eddy Current Test (ECT), Operation variables, Eddy current instrumentation, Reference standards, Applications. **Ultrasonic Test:** Advantages and limitations of Ultrasonic Test (UT), General characteristics of ultrasonic waves, Wave propagation and types of ultrasonic	7

waves, Major variables in UT, Angle beam techniques, Immersion testing, Applications. **Radiography Test:** Uses/ Applicability of radiography, Advantages and limitations of Radiography Test (RT), Interaction between penetrating radiation & matter (Attenuation), Image conversion media, Film radiography, Real time radiography. **Other Non-destructive Inspection Techniques:** Acoustic emission inspection, Microwave inspection, Thermal inspection, Electromagnetic techniques for residual stress measurements, Optical holography, etc.	
Practical Exercises	
Exercise 5: Detect of Surface flaws in specimen using Ultrasonic test.	6
Exercise 6: Detect the cracks in specimen using Magnetic particle test.	6
Exercise 7: Detect the Surface and near surface flaws in specimen using Eddy Current test.	6
Exercise 8: Case Study experiment - Can analyze entire structure of Any one used machine components using Acoustic emission test.	6
Assessment Test + Revision	12
Total	75

TEXT BOOKS

1. "Non Destructive Evaluation and Quality Control", Metals Handbook, Vol. 17, 9th Ed., ASM.1989
2. Srivastava, K.C., "Handbook of Magnetic Particle Testing", Oscar publications. 1998
3. Hull, B., "Non Destructive Testing", Springer. 2012
4. Dr.V.Jayakumar,Dr.K.Elangovan"Non-Destructive Testing of Materials"Lakshmi Publications,Chennai,2017
5. Baldev Raj, Jayakumar T, Thavasimuthu M, Practical Non- Destructive Testing, 3rd Ed., Narosa. 2019

1020236243	NON DESTRUCTIVE TESTING	L	T	P	C
PRACTICUM		1	0	4	3

Web-based/Online Resources:

- www.ndt-ed.org
- www.krautkramer.com.au
- https://onlinecourses.nptel.ac.in/noc23_mm05

END SEMESTER EXAMINATION - Practical Exam

Note:

All the exercises should be completed before the Board Practical Examinations. End Semester Practical examination should be conducted for all the exercises / experiments for 100 Marks. Students will be permitted to select any one exercise by lot or question paper supplied by the DOTE Exam section shall be used. The practical document prepared by the student should be submitted with a Bonafide Certificate.

SCHEME OF EVALUATION

PART	DESCRIPTION	MARKS
A	Procedure/Preparation	15
B	Observation/Drawing	20
C	Accuracy	15
D	Result	10
E	Written Test	30
F	Viva Voce	10
TOTAL		100

Note: For the written test 30 MCQ shall be asked from the theory portions.

1020236244	**Process Automation**	L	T	P	C
PRACTICUM		1	0	4	3

Introduction:

Process automation uses technology to automate complex business processes. It typically has three functions: automating processes, centralizing information, and reducing the requirement for input from people. It is designed to remove bottlenecks, reduce errors and loss of data, all while increasing transparency, communication across departments, and speed of processing. Process automation uses technology to automate complex business processes. It typically has three functions: automating processes, centralizing information, and reducing the requirement for input from people. It is designed to remove bottlenecks, reduce errors and loss of data, all while increasing transparency, communication across departments, and speed of processing.

Course Objectives:

The objective of this course is to enable the student to

- Design and operate pneumatic circuits.
- Design and operate fluid power circuits.
- Use PLC system and its elements for process control.
- Familiarize the working of function blocks in PLC
- Use ON-Delay timer to control a motor
- Use OFF-Delay timer to control a motor
- Use counter function block (Up counter and Down counter)
- Control the automatic operation of pneumatic cylinder using PLC

Course Outcomes

On successful completion of this course, the student will be able to

CO1: Explain the working of hydraulic and pneumatics systems and its elements.

CO2: Familiarise the various symbols of hydraulic and pneumatics systems

CO3: Construct the Hydraulic and Pneumatics circuits for different applications

CO4: Explain the working of logic gates and features of PLC

CO5: Apply the Logic gates and PLC for the automatic operations of hydraulics and pneumatic machines.

1020236244	**Process Automation**	L	T	P	C
PRACTICUM		1	0	4	3

Pre-requisites:

Fluid Mechanics, Basic Electrical and Mechanical Engineering

CO/PO Mapping

CO / PO	PO1	PO2	PO3	PO4	PO5	PO6	PO7
CO1	3	-	-	3			
CO2	3	-	-	3			
CO3	3	-	-	3			
CO4	3	-	-	3			
CO5	3	-	-	3			

Legend: 3-High Correlation, 2-Medium Correlation, 1-Low Correlation

Instructional Strategy:

- It is advised that teachers take steps to pique pupils' attention and boost their curiosity to learn.•Implement task-based learning activities where students work on specific tasks or projects.
- Incorporate technology tools and resources, such as online platforms, interactive multimedia, and virtual communication tools, to enhance engagement and provide additional practice opportunities.
- Incorporate formative and summative assessments to gauge student progress and provide targeted feedback.
- Throughout the course, a theory-demonstrate-practice-activity strategy may be used to ensure that learning is outcome and employability based.
- All demonstrations/Hand-on practices may be followed in the real environment as far as possible.

1020236244	**Process Automation**	L	T	P	C
PRACTICUM		1	0	4	3

Assessment Methodology:

	Continuous Assessment (40 marks)				**End Semester Examination (60 marks)**
	CA1	**CA2**	**CA3**	**CA4**	
Mode	Practical Test	Practical Test	Written Test Theory	Practical Test	Practical Examination
Portion	Cycle I Exercises	Cycle II Exercises	All Portions	All Exercises	All Exercises Experiments
Duration	2 Periods	2 Periods	3 Hours	3 Hours	3 hours
Exam Marks	60	60	100	100	100
Converted to Marks	10	10	15	15	60
Marks	10		15	15	60
Internal Marks	40				
Tentative Schedule	7th Week	14th Week	15th Week	16th Week	

Note:

CA1 and CA2: All the exercises/experiments should be completed as per the portions above and kept for the practical test. The students shall be permitted to select any one by lot for the test. The practical test should be conducted as per the scheme of evaluation as below. The marks awarded shall be converted to 10 Marks for each assessment test. Best of one will be considered for the internal assessment of 10 Marks.

Practical documents should be maintained for every experiment immediately after completion of the practice. The practical document should be submitted for the practical test. The same should be evaluated for 10 Marks for each exercise/experiment. The total marks awarded should be converted to 10 Marks for the practical test as per the scheme of evaluation as below.

1020236244	Process Automation	L	T	P	C
PRACTICUM		1	0	4	3

The details of the documents to be prepared as per the instruction below.

Each exercise should be completed on the day of practice. The same shall be evaluated for 10 marks on the day or next day of practice before commencement of the next experiment.

This documentation can be carried out in a separate notebook or a printed manual or a file with documents. The Procedure, Sketch and Result / Output should be written by the student manually in the documents.

The detailed date of the practices and its evaluations should be maintained in the course logbook. The log book and the practical documents should be submitted for the verification by the Flying Squad and DoTE Official.

SCHEME OF EVALUATION

PART	DESCRIPTION	MARKS
A	Procedure / Preparation	15
B	Circuit / Program	20
C	Execution / Connection	15
TOTAL		50
D	Practical Documents (As per the portions)	10
		60

Cycle - I - Exercise 1, 2, 3,4 and 5.

Cycle - II - Exercise 6, 7, 8, 9 and 10.

CA 3: Written Test for complete theory portions should be conducted for 100 Marks as per the question pattern below. The marks scored will be converted to 15 Marks for internal assessment.

1020236244	Process Automation	L	T	P	C
PRACTICUM		1	0	4	3

Question pattern – Written Test Theory

Description		Marks	
Part – A	30 MCQ Questions.	30 X 1 Mark	30 Marks
Part – B	7 Questions to be answered out of 10 Questions.	7 X 10 Marks	70 Marks
TOTAL			100 Marks

CA 4: All the exercises/experiments should be completed and kept for the practical test. The students shall be permitted to select any one by lot for the test. The practical test should be conducted as per the scheme of evaluation below. After completion of all the exercises the practical test should be conducted as per End Semester Examination question pattern scheme of evaluation. The marks awarded should be converted to 15 Marks for the internal assessment.

SCHEME OF EVALUATION

Model Practical Examination and End Semester Examination - Practical Exam

PART	DESCRIPTION	MARKS
A	Procedure / Preparation	15
B	Circuit / Program	20
C	Execution / Connection	15
D	Result	10
E	Written Test	30
F	Viva Voce	10
TOTAL		100

Note: For the written test 30 MCQ shall be asked from the theory portions.

Syllabus Contents

1020236244	**Process Automation**	L	T	P	C
PRACTICUM		1	0	4	3

Theory Portion	
UNIT I: HYDRAULICS AND PNEUMATIC SYSTEMS	7
Pneumatic systems: Elements-FLR unit-Direction Control Valves-Flow control Valves-ISO Symbols of Pneumatic Components-pneumatic circuits for various industrial applications. Hydraulic Systems: Elements – comparison of Pneumatic systems and Hydraulic systems-service properties of hydraulic fluids-ISO symbols of hydraulic Components-hydraulic circuits for various industrial applications.	
Practical Exercises	
Pneumatics Lab	15
Exercise 1: Operation of double acting cylinder with quick exhaust valve.	
Exercise 2: Speed control of a double acting cylinder using metering-in and metering-out circuits.	
Exercise 3: Automatic operation of double acting cylinder in single cycle - using limit switch.	
Hydraulics Lab	10
Exercise 4: Direct operation of the double acting cylinder.	
Exercise 5: Speed control of double acting cylinder metering-in and metering-out control.	

Theory Portion	
UNIT II: LOGIC GATES AND PLC	8
PLC Features of PLC - PLC Block diagram - PLC scan. Fixed and Modular PLC. Ladder logic - Basic principles of Ladder diagram , Analog I / O and Digital I /O, NO, NC contacts - Coils - AND logic, OR logic.- Applications - Timer - Counter.	
Practical Exercises	
PLC Lab	25
Exercise 6: Direct operation of a motor using a latching circuit, AND, OR, logic circuits.	
Exercise 7: On-Delay control of a motor and Off –Delay control of a motor.	

1020236244	Process Automation	L	T	P	C
PRACTICUM		1	0	4	3

Exercise 8: Automatic operation of Double acting cylinder-Multi cycle.	
Exercise 9: Sequential operation of a double acting cylinder and a motor.	
Exercise 10: Automatic operation of DAC, Forward time delay return.	
Assessment Test and Revision	10
Total	75

END SEMESTER EXAMINATION - Practical Exam

Note:

All the exercises should be completed before the Board Practical Examinations. End Semester Practical examination should be conducted for all the exercises / experiments for 100 Marks. Students will be permitted to select any one exercise by lot or question paper supplied by the DOTE Exam section shall be used. The practical document prepared by the student should be submitted with a Bonafide Certificate.

SCHEME OF EVALUATION

PART	DESCRIPTION	MARKS
A	Procedure / Preparation	15
B	Circuit / Program	20
C	Execution / Connection	15
D	Result	10
E	Written Test	30
F	Viva Voce	10
TOTAL		100

Note: For the written test 30 MCQ shall be asked from the theory portions.

1020236244	**Process Automation**	L	T	P	C
PRACTICUM		1	0	4	3

Equipment / Facilities required to conduct the Practical Course.

Note: The components should be supplied separately. Students should fix the board to execute the circuit.

1. Pneumatic Trainer Board – 2 Nos

   (All Cylinders, Control Valves, Limit switches and other accessories should be kept separately and should not be fixed permanently in the board/ stand.)
2. Hydraulics Trainer Board – 2 No.

   (All Cylinders, Control Valves, Limit switches and other accessories should be kept separately and should not be fixed permanently in the board / stand.)
3. PLC – 3 Nos.
4. Computer with software – 10 Nos.

1020236245	PRODUCT DESIGN & DEVELOPMENT	L	T	P	C
PRACTICUM		1	0	4	3

Introduction:

A product is something sold by an enterprise to its customers. Product design deals with conversion of ideas into reality and, as in other forms of human activity, aims at fulfilling human needs. Product development is the set of activities beginning with the perception of a market opportunity and ending in the production, sale, and delivery of a product.

Course Objectives:

The objective of the course is

1. To excel in new product design and development through application of knowledge and practical skills.
2. To provide students with a solid foundation in mathematical modeling of engineering problems required for bringing new products fast into the market.
3. To provide students with required scientific and engineering knowledge so as to comprehend, analyze, design and create innovative products and solutions for real life problems.
4. To inculcate professional and ethical values in students and enable them to work in multidisciplinary teams.
5. To provide students an academic environment which can facilitate life-long learning needed for a successful career in new product development.

Course Outcomes:

On successful completion of this course, student will be able to

CO1: Describe the characteristics used for product design and development.

CO2: Assess the customer requirements in product design.

CO3: Apply structural approach to concept generation, selection and testing.

CO4: Identify various aspects of design such as industrial design, design for manufacture, assembly, service and quality and product architecture.

CO5: Explain various principles and technologies used for the preparation of prototype.

1020236245	PRODUCT DESIGN & DEVELOPMENT	L	T	P	C
PRACTICUM		1	0	4	3

Pre-requisites:

Knowledge of basic Science: Design of machine elements, CAD/CAM and Product Life Cycle Management.

CO/PO Mapping

CO / PO	PO1	PO2	PO3	PO4	PO5	PO6	PO7
CO1	2	2	1	1	1	1	1
CO2	2	1	2	1	1	1	1
CO3	2	2	2	2	1	1	1
CO4	2	2	1	1	2	1	1
CO5	2	2	1	2	1	1	1

Legend: 3-High Correlation, 2-Medium Correlation, 1-Low Correlation

Instructional Strategy:

1. Real time product design should be shown through video.
2. The subject can Lecture Cum Demonstration basics.
3. Practical demonstrations should be organized (industrial Visit).

1020236245	PRODUCT DESIGN & DEVELOPMENT	L	T	P	C
PRACTICUM		1	0	4	3

Assessment Methodology:

	Continuous Assessment (40 marks)				End Semester Examination (60 marks)
	CA1	**CA2**	**CA3**	**CA4**	
Mode	Practical Test	Practical Test	Written Test Theory	Practical Test	Practical Examination
Portion	Cycle I Exercises	Cycle II Exercises	All Portions	All Exercises	All Exercises Experiments
Duration	2 Periods	2 Periods	3 Hours	3 Hours	3 hours
Exam Marks	60	60	100	100	100
Converted to Marks	10	10	15	15	60
Marks	10		15	15	60
Internal Marks	40				
Tentative Schedule	7th Week	14th Week	15th Week	16th Week	

Note:

CA1 and CA2: All the exercises/experiments should be completed as per the portions above and kept for the practical test. The students shall be permitted to select any one by lot for the test. The practical test should be conducted as per the scheme of evaluation as below. The marks awarded shall be converted to 10 Marks for each assessment test. Best of one will be considered for the internal assessment of 10 Marks.

Practical documents should be maintained for every experiment immediately after completion of the practice. The practical document should be submitted for the practical test. The same should be evaluated for 10 Marks for each exercise/experiment. The total marks awarded should be converted to 10 Marks for the practical test as per the scheme of evaluation as below.

1020236245	PRODUCT DESIGN & DEVELOPMENT	L	T	P	C
PRACTICUM		1	0	4	3

The details of the documents to be prepared as per the instruction below.

Each exercise should be completed on the day of practice. The same shall be evaluated for 10 marks on the day or next day of practice before commencement of the next experiment.

This documentation can be carried out in a separate notebook or a printed manual or a file with documents. The Procedure, Sketch and Result / Output should be written by the student manually in the documents.

The detailed date of the practices and its evaluations should be maintained in the course logbook. The log book and the practical documents should be submitted for the verification by the Flying Squad and DoTE Official.

SCHEME OF EVALUATION

PART	DESCRIPTION	MARKS
A	Procedure / Preparation	10
B	Step / Report	20
C	Presentation	20
	TOTAL	50
D	Practical Documents (As per the portions)	10
		60

Cycle - I - Exercise 1, 2, 3,4 and 5.

Cycle - II - Exercise 6, 7, 8, 9 and 10.

CA 3: Written Test for complete theory portions should be conducted for 100 Marks as per the question pattern below. The marks scored will be converted to 15 Marks for internal assessment.

Question pattern – Written Test Theory

Description		**Marks**	
Part – A	30 MCQ Questions.	30 X 1 Mark	30 Marks
Part – B	7 Questions to be answered out of 10 Questions.	7 X 10 Marks	70 Marks
TOTAL			100 Marks

1020236245	PRODUCT DESIGN & DEVELOPMENT	L	T	P	C
PRACTICUM		1	0	4	3

CA 4: All the exercises/experiments should be completed and kept for the practical test. The students shall be permitted to select any one by lot for the test. The practical test should be conducted as per the scheme of evaluation below. After completion of all the exercises the practical test should be conducted as per End Semester Examination question pattern scheme of evaluation. The marks awarded should be converted to 15 Marks for the internal assessment.

SCHEME OF EVALUATION

Model Practical Examination and End Semester Examination - Practical Exam

PART	DESCRIPTION	MARKS
A	Procedure / Preparation	10
B	Step / Report	20
C	Presentation	20
D	Result / output	10
E	Written Test	30
F	Viva Voce	10
	TOTAL	100

Note: For the written test 30 MCQ shall be asked from the theory portions.

Syllabus Contents

Unit I	**INTRODUCTION**
Theory: Product life cycle, Product policy of an organization, Selection of a profitable product, Product design process, New product strategy Idea generation, Screening Concept development, Testing Business analysis Product development testing and Analysis Commercialization Collaboration. Gantt chart product life cycle management.	3
Practical: 1. Case studies related to Characteristics of successful product development, Design and development of products. 2. Case studies related to different Development Processes and Organizations.	10

Unit II	PRODUCT PLANNING	
Theory: The product planning process, identify opportunities. Evaluate and prioritize projects, allocate resources and plan timing, complete pre project planning, reflect all the results and the process.		3
Practical: 3. Case studies related to the product planning process, identify opportunities. 4. Case studies related to Concept Generation, Concept Selection, Concept Testing.		10
Unit III	**IDENTIFYING CUSTOMER NEEDS**	
Theory: Gather raw data from customers, interpret raw data in terms of customer needs, organize the needs into a hierarchy, establish the relative importance of the needs and reflect on the results and the process. Product Specifications: What are specifications, when are specifications established, establishing target specifications, setting the final specifications.		3
Practical: 5. Case studies related to Identifying Customer Needs. 6. Case studies related to Customer Product Specification.		10
Unit IV	**CONCEPT GENERATION**	
Theory: Product implications of the architecture, establishing the architecture, variety and supply chain considerations. Industrial design: Assessing the need for industrial design, the impact of industrial design, industrial design process, managing the industrial design process, assessing the quality of industrial design. Design for manufacturing: Definition, estimation of manufacturing cost, reducing the cost of components, assembly, supporting production, impact of DFM on other factors, service and quality.		3
Practical: 7. Case studies related to Product Architecture.		10

8. Case studies related to Design for Manufacturing.		
Unit V	**PROTOTYPING**	
Theory: Prototyping basics, principles of prototyping, technologies, planning for prototypes. Product development economics, Elements of economic analysis, base case financial mode, sensitive analysis, project trade-offs, influence of qualitative factors on project success, qualitative analysis.		3
Practical: 9. Case studies related to Prototyping, Product Development Economics. 10. Field Visit Report manufacturing or assembling industry.(Automobile Industry – Minimum – 4 Hrs) – Report should include: various steps involved in product manufacturing or product assemble ...(not included in Practical Exam)		10
Assessment + Revision		10
TOTAL		75

Suggested List of Students Activity:

Other than the classroom learning, the following are the suggested student related co- curricular activities which can be undertaken to accelerate the attainment of the various outcomes in this course.

1. Online video demonstration.
2. Practical demonstration.
3. Automobile industry visit and prepare a report.

Involve students in trouble shooting activities either in group or individual.

Text and Reference Books:

1. Karl T Ulrich, Steven D Eppinger , " Product Design & Development." Tata McGrawhill New Delhi 2003
2. Hollins B & Pugh S "Successful Product Design." Butter worths London.
3. Bralla J G "Handbook of Product Design for Manufacture, McGrawhill NewYork.

1020236245	PRODUCT DESIGN & DEVELOPMENT	L	T	P	C
PRACTICUM		1	0	4	3

4. A K Chitale and R C Gupta, Product Design and Manufacturing, 6th Edition, PHI, New Delhi, 2003.

5. Boothroyd G, Dewhurst P and Knight W, Product Design for Manufacture and Assembly, 2nd Edition, Marcel Dekker, New York, 2002.

Web-based/Online Resources:

https://archive.nptel.ac.in/courses/112/107/112107217/

End Semester Examination - Practical Exam

Note:

All the exercises should be completed before the Board Practical Examinations. End Semester Practical examination should be conducted for all the exercises / experiments for 100 Marks. Students will be permitted to select any one exercise by lot or question paper supplied by the DOTE Exam section shall be used. The practical document prepared by the student should be submitted with a Bonafide Certificate.

SCHEME OF EVALUATION

PART	DESCRIPTION	MARKS
A	Procedure / Preparation	10
B	Step / Report	20
C	Presentation	20
D	Result / output	10
E	Written Test	30
F	Viva Voce	10
TOTAL		100

Note: For the written test 30 MCQ shall be asked from the theory portions.

1020236246	**Electric Vehicle Technology**	L	T	P	C
PRACTICUM		1	0	4	3

Introduction:

The world is transitioning to cleaner mobility options with the aim at improving air quality and reducing dependency on fossil fuels. Electric Vehicles (EVs) have emerged as a popular clean mobility choice to reduce emissions. EVs are powered fully or partially by batteries, they can help to reduce dependence on fossil fuels and also air quality.

Course Objectives:

The objective of this course is to enable the students to

- Learn and practice the charging systems of Electric Vehicles.
- Understand the concept of Electric Vehicle components.
- Study the configurations of Electric Vehicles and assemble.

Course Outcomes

On successful completion of this course, the student will be able to

CO1: Describe the electric vehicle and sub systems.

CO2: Demonstrate and test the EV battery and charging system.

CO3: Apply the procedures and testing of electric components and their accessories.

CO4: Test, diagnose and service the given electric two-wheeler.

CO5: Construct and test the electric Three-wheeler.

Pre-requisites:

Nil

1020236246	Electric Vehicle Technology	L	T	P	C
PRACTICUM		1	0	4	3

CO/PO Mapping

CO / PO	PO1	PO2	PO3	PO4	PO5	PO6	PO7
CO1	1	-	-	-	1	-	-
CO2	2	1	-	2	-	-	1
CO3	1	1	1	2	-	-	1
CO4	1	1	1	2	-	-	1
CO5	1	1	1	1	-	-	1

Legend: 3-High Correlation, 2-Medium Correlation, 1-Low Correlation

Instructional Strategy:

- Engage and Motivate: Instructors should actively engage students to boost their learning confidence.
- Interactive Learning: Utilize demonstrations and plan interactive student activities for an engaging learning experience.
- Application-Based Learning: Employ a theory-demonstrate-practice-activity strategy throughout the course to ensure outcome-driven learning and employability.
- Simulation and Real-World Practice: Conduct demonstrations and hands-on activities in a simulated environment, transitioning to real-world scenarios when possible.
- Encourage Critical Analysis: Foster an environment where students can honestly assess experiment outcomes and analyze potential sources of error in case of discrepancies.
- The industry session shall be addressed by industry experts (in contact mode/online / recorded video mode) in the discipline only.

1020236246	**Electric Vehicle Technology**	L	T	P	C
PRACTICUM		1	0	4	3

Assessment Methodology:

	Continuous Assessment (40 marks)				**End Semester Examination (60 marks)**
	CA1	**CA2**	**CA3**	**CA4**	
Mode	Practical Test	Practical Test	Written Test Theory	Practical Test	Practical Examination
Portion	Cycle I Exercises	Cycle II Exercises	All Portions	All Exercises	All Exercises Experiments
Duration	2 Periods	2 Periods	3 Hours	3 Hours	3 hours
Exam Marks	60	60	100	100	100
Converted to Marks	10	10	15	15	60
Marks	10		15	15	60
Internal Marks	40				
Tentative Schedule	7th Week	14th Week	15th Week	16th Week	

Note:

CA1 and CA2: All the exercises/experiments should be completed as per the portions above and kept for the practical test. The students shall be permitted to select any one by lot for the test. The practical test should be conducted as per the scheme of evaluation as below. The marks awarded shall be converted to 10 Marks for each assessment test. Best of one will be considered for the internal assessment of 10 Marks.

Practical documents should be maintained for every experiment immediately after completion of the practice. The practical document should be submitted for the practical test. The same should be evaluated for 10 Marks for each exercise/experiment. The total marks awarded should be converted to 10 Marks for the practical test as per the scheme of evaluation as below.

1020236246	Electric Vehicle Technology	L	T	P	C
PRACTICUM		1	0	4	3

The details of the documents to be prepared as per the instruction below.

Each exercise should be completed on the day of practice. The same shall be evaluated for 10 marks on the day or next day of practice before commencement of the next experiment.

This documentation can be carried out in a separate notebook or a printed manual or a file with documents. The Procedure, Sketch and Result / Output should be written by the student manually in the documents.

The detailed date of the practices and its evaluations should be maintained in the course logbook. The log book and the practical documents should be submitted for the verification by the Flying Squad and DoTE Official.

SCHEME OF EVALUATION

PART	DESCRIPTION	MARKS
A	Procedure / Explanation	10
B	Observation/ Assembly/ Reading	20
C	Test Report	20
TOTAL		50
D	Practical Documents (As per the portions)	10
		60

Cycle - I - Exercise 1, 2, 3,4 and 5.

Cycle - II - Exercise 6, 7, 8, 9 and 10.

CA 3: Written Test for complete theory portions should be conducted for 100 Marks as per the question pattern below. The marks scored will be converted to 15 Marks for internal assessment.

1020236246	Electric Vehicle Technology	L	T	P	C
PRACTICUM		1	0	4	3

Question pattern – Written Test Theory

Description		Marks	
Part – A	30 MCQ Questions.	30 X 1 Mark	30 Marks
Part – B	7 Questions to be answered out of 10 Questions.	7 X 10 Marks	70 Marks
TOTAL			100 Marks

CA 4: All the exercises/experiments should be completed and kept for the practical test. The students shall be permitted to select any one by lot for the test. The practical test should be conducted as per the scheme of evaluation below. After completion of all the exercises the practical test should be conducted as per End Semester Examination question pattern scheme of evaluation. The marks awarded should be converted to 15 Marks for the internal assessment.

SCHEME OF EVALUATION

Model Practical Examination and End Semester Examination - Practical Exam

PART	DESCRIPTION	MARKS
A	Aim & Apparatus Required	10
B	Procedure / Explanation	10
C	Observation/ Assembly/ Reading	20
D	Test Report	20
E	Written Test (Theory Portions)	30
F	Viva Voce	10
TOTAL		100

Note: For the written test 30 MCQ shall be asked from the theory portions.

1020236246	**Electric Vehicle Technology**	L	T	P	C
PRACTICUM		1	0	4	3

Syllabus Contents

Theory Portion - Electric Vehicle and accessories	
Environmental impact of conventional vehicle - Air pollution –History of Electric vehicles – Need for Electric Vehicle. Battery Electric Vehicle (BEV) –Block diagram of BEV - Major Components of Electric Vehicle – Working of BEV. Battery: Construction and working of Lead Acid and Lithium Based Batteries –Battery Management System. Battery Charging Techniques: Battery Charging techniques – Constant current and Constant voltage, Trickle charging – Battery Swapping Techniques. Types of EV motors - Permanent Magnetic BrushLess DC Motor Drives (BLDC) – Principles, Construction and Working – Hub motor Drive system – Merits and Demerits of DC motor drive, BLDC motor drive. Power Converters: Role of Power Converters – Block diagram of Power Converters in EV – Types of Power Converters – DC to DC Converter, Inverter and Rectifier. Electronics Power Steering – Torque Sensor – EPS Motor – Regenerative Suspension System –Regenerative Braking system. Tamil Nadu EV Policy 2019 & 2023.	15
Practical Exercises	
Experiment 1: Battery Testing – Specific Gravity Test, Open volt testing, Cell voltage tester.	5
Experiment 2: Test the Lead acid Battery using voltage Load tester and test the battery pack supply to glow the Head lamp.	5
Experiment 3: Test the battery charging (Series and Parallel) and note the various charging parameters.	5
Experiment 4: Identify and test EV components. (Controller, Throttle, EV motor, Power ON Key, brake, indicator, horn and headlight)	5
Experiment 5: Construct and testing of BLDC Motor with throttle control.	5
Experiment 6: Test the Inverter circuit and buck converter circuit.	5

1020236246	**Electric Vehicle Technology**	L	T	P	C
PRACTICUM		1	0	4	3

Experiment 7: Assemble and test E-bicycle with wiring harness.	5
Experiment 8: Assemble and test E-Bike with a central drive mechanism (Chain drive) with wiring harness.	5
Experiment 9: Assemble and test E-Auto rickshaw with differential and wiring harness.	5
Experiment 10: Plan maintenance and servicing schedule of electric two-wheeler.	5
Assessment Test and Revision	10
Total	75

Suggested List of Students Activity:

- Presentation/Seminars by students on any recent technological developments based on the course.

Text and Reference Books:

1. A.K Babu, Electric & Hybrid Vehicle, Khanna Publication, New Delhi – 2018 Edition
2. Iqbal Husian, Electric and Hybrid Vehicle Design Fundamentals, CRC Press, Boca Raton, Florida
3. Comparison of Electric and Conventional Vehicles in Indian Market: Total Cost of Ownership, Consumer Preference and Best Segment for Electric Vehicle (IJSR), Akshat Bansal, Akriti Agarwal
4. Tamil Nadu Electric Vehicles Policy 2019 & 2023 .
5. Design and analysis of aluminum/air battery system for electric vehicles, Shaohua Yang, Harold Knickle, Elsevier.
6. Propelling Electric Vehicles in India, Technical study of Electric Vehicles and Charging Infrastructure

1020236246	Electric Vehicle Technology	L	T	P	C
PRACTICUM		1	0	4	3

Web-based/Online Resources:

1. NPTEL Fundamentals of Electric vehicles: Technology & Economics https://nptel.ac.in/courses/108106170
2. NPTEL Introduction to Hybrid and Electric Vehicles, IIT Guwahati https://nptel.ac.in/courses/108103009

END SEMESTER EXAMINATION - Practical Exam

Note:

All the exercises should be completed before the Board Practical Examinations. End Semester Practical examination should be conducted for all the exercises / experiments for 100 Marks. Students will be permitted to select any one exercise by lot or question paper supplied by the DOTE Exam section shall be used. The practical document prepared by the student should be submitted with a Bonafide Certificate.

SCHEME OF EVALUATION

PART	DESCRIPTION	MARKS
A	Aim & Apparatus Required	10
B	Procedure / Explanation	10
C	Observation/ Assembly/ Reading	20
D	Report	20
E	Written Test (Theory Portions)	30
F	Viva Voce	10
TOTAL		100

Note: For the written test 30 MCQ shall be asked from the theory portions.

1020236246	Electric Vehicle Technology	L	T	P	C
PRACTICUM		1	0	4	3

Equipment / Facilities required to conduct the Practical Course.

Sl. No.	Machines / Tools / Equipments	Quantity
1.	Lead acid battery / Lithium-ion battery	8 Nos.
2.	Battery Load tester	1 No.
3.	Specific gravity tester- Hydrometer	2 Nos.
4.	Cell voltage tester (High Discharge Tester)	1 No.
5.	Buck Converter	2 Nos.
6.	Battery Charger	1 No.
7.	Inverter Trainer Kit	1 No
8.	BLDC motor control Trainer kit or accessories	1 No
9.	Two-wheeler Wiring Harness board or kit	1 No
10.	E – Bicycle kit or Accessories 1. 24V DC Controller, 24 V DC motor 2. Throttle, Brake, Power ON key 3. Head lamp with Horn	1 No
11.	E – Bike kit or Accessories 1. 48 V BLDC Controller, 500W or 750 W, 48 V BLDC motor, Throttle, Brake, Power ON key, Display Board, Head lamp with Horn, Left & Right Indicator	1 No
12.	E-Auto Rickshaw 500 W or 750 W, 48 V BLDC motor with differential arrangement 1. Throttle 2. Brake 3. Power ON key 4. Display Board 5. Head lamp with Horn 6. Left & Right Indicator	1 No

13.	**Consumable: -** ● Battery Cell - 1.5 V or 3.65 V ● Soldering Iron ● Flux ● De-solder gun or Solder wick ● Lead **Tools** ● Continuity Tester ● Line Tester ● Multi-meter ● Screw Drive set & Spanner set	As per requirement

1020236247	REVERSE ENGINEERING	L	T	P	C
PRACTICUM		1	0	4	3

Introduction:

Reverse Engineering (RE) has become an important Engineering task to obtain knowledge about engineering devices or systems. RE is an effective learning technique if other "solutions" are available on the market.

Course Objectives:

After the completion of the course, students should be able to:

- Understand basic engineering systems.
- Understand the terminologies related to re-engineering, forward engineering, and reverse engineering.
- Disassemble products and specify the interactions between its subsystems and their functionality
- Understand Reverse Engineering methodologies.
- Understand Reverse engineering of Systems, Mechanical RE.

Course Outcomes

On successful completion of this course, student will be able to

CO1: Explain the fundamental concepts and principles of reverse engineering in product design and development.

CO2: Describe the principles of material characteristics, part durability and life limitation in reverse engineering

CO3: Apply the principles of material identification and process verification in product design and development.

CO4: Explain the principles of rapid prototyping

CO5: Analyze the various legal aspect and applications of reverse engineering in product design and development

1020236247	REVERSE ENGINEERING	L	T	P	C
PRACTICUM		1	0	4	3

Pre-requisites:

Material Science, Machine Design, Machine Drawing and Value Engineering.

CO/PO Mapping

CO / PO	PO1	PO2	PO3	PO4	PO5	PO6	PO7
CO1	3	2		1			
CO2	3	2		1			
CO3	3	2		1			
CO4	3	2		1			
CO5	3	2		1			

Legend: 3-High Correlation, 2-Medium Correlation, 1-Low Correlation

Instructional Strategy:

- Engage and Motivate: Instructors should actively engage students to boost their learning confidence.
- Real-World Relevance: Incorporate relatable, real-life examples and engineering applications to help students understand and appreciate course concepts.
- Interactive Learning: Utilize demonstrations and plan interactive student activities for an engaging learning experience.
- Application-Based Learning: Employ a theory-demonstrate-practice-activity strategy throughout the course to ensure outcome-driven learning and employability.
- Simulation and Real-World Practice: Conduct demonstrations and hands-on activities in a simulated environment, transitioning to real-world scenarios when possible.
- Encourage Critical Analysis: Foster an environment where students can honestly assess experiment outcomes and analyse potential sources of error in case of discrepancies

1020236247	REVERSE ENGINEERING	L	T	P	C
PRACTICUM		1	0	4	3

Assessment Methodology:

	Continuous Assessment (40 marks)				End Semester Examination (60 marks)
	CA1	**CA2**	**CA3**	**CA4**	
Mode	Practical Test	Practical Test	Written Test Theory	Practical Test	Practical Examination
Portion	Cycle I Exercises	Cycle II Exercises	All Portions	All Exercises	All Exercises Experiments
Duration	2 Periods	2 Periods	3 Hours	3 Hours	3 hours
Exam Marks	60	60	100	100	100
Converted to Marks	10	10	15	15	60
Marks	10		15	15	60
Tentative Schedule	7th Week	14th Week	15th Week	16th Week	

Note:

CA1 and CA2: All the exercises/experiments should be completed as per the portions above and kept for the practical test. The students shall be permitted to select any one by lot for the test. The practical test should be conducted as per the scheme of evaluation as below. The marks awarded shall be converted to 10 Marks for each assessment test. Best of one will be considered for the internal assessment of 10 Marks.

Practical documents should be maintained for every experiment immediately after completion of the practice. The practical document should be submitted for the practical test. The same should be evaluated for 10 Marks for each exercise/experiment. The total marks awarded should be converted to 10 Marks for the practical test as per the scheme of evaluation as below.

1020236247	REVERSE ENGINEERING	L	T	P	C
PRACTICUM		1	0	4	3

The details of the documents to be prepared as per the instruction below.

Each exercise should be completed on the day of practice. The same shall be evaluated for 10 marks on the day or next day of practice before commencement of the next experiment.

This documentation can be carried out in a separate notebook or a printed manual or a file with documents. The Procedure, Sketch and Result / Output should be written by the student manually in the documents.

The detailed date of the practices and its evaluations should be maintained in the course logbook. The log book and the practical documents should be submitted for the verification by the Flying Squad and DoTE Official.

SCHEME OF EVALUATION

PART	DESCRIPTION	MARKS
A	Aim & Apparatus Required	10
B	Procedure / Explanation	20
C	Presentation	20
TOTAL		50
D	Practical Documents (As per the portions)	10
		60

Cycle - I - Exercise 1, 2, 3,4 and 5.

Cycle - II - Exercise 6, 7, 8 and 9.

CA 3: Written Test for complete theory portions should be conducted for 100 Marks as per the question pattern below. The marks scored will be converted to 15 Marks for internal assessment.

1020236247	REVERSE ENGINEERING	L	T	P	C
PRACTICUM		1	0	4	3

Question pattern – Written Test Theory

Description		**Marks**	
Part – A	30 MCQ Questions.	30 X 1 Mark	30 Marks
Part – B	7 Questions to be answered out of 10 Questions.	7 X 10 Marks	70 Marks
TOTAL			100 Marks

CA 4: All the exercises/experiments should be completed and kept for the practical test. The students shall be permitted to select any one by lot for the test. The practical test should be conducted as per the scheme of evaluation below. After completion of all the exercises the practical test should be conducted as per End Semester Examination question pattern scheme of evaluation. The marks awarded should be converted to 15 Marks for the internal assessment.

SCHEME OF EVALUATION

Model Practical Examination and End Semester Examination - Practical Exam

PART	DESCRIPTION	MARKS
A	Aim & Apparatus Required	10
B	Procedure / Explanation	20
C	Presentation	20
D	Result	10
E	Written Test	30
F	Viva Voce	10
TOTAL		100

Note: For the written test 30 MCQ shall be asked from the theory portions.

1020236247	REVERSE ENGINEERING	L	T	P	C
PRACTICUM		1	0	4	3

Syllabus Contents

Unit I	**Introduction**	
Theory: Definition – Uses – the Generic Process – Phases – Computer Aided Reverse Engineering - Surface and Solid Model Reconstruction – Dimensional Measurement – Prototyping.		3
Practical: 1. Prepare case study report – various type of rapid Proto type also write the technical difference.		6
UNIT II	**MATERIAL IDENTIFICATION AND PROCESS VERIFICATION**	
Theory: Material Specification, Composition Determination, Microstructure Analysis, Manufacturing Process Verification.		3
Practical: 2. Material Strength Testing: Compare the strength properties of different materials commonly used in automobile components, such as steel, aluminum, and composite materials. Perform tensile, compressive, and bending tests to determine their suitability for various vehicle types. **3.** Impact Resistance Analysis: Test the impact resistance of different Automobile body materials by subjecting them to controlled impacts. Measure and compare the deformation and damage caused by impacts of varying intensity.		12
Unit III	**MATERIAL CHARACTERISTICS, PART DURABILITY AND LIFE LIMITATION**	
Theory: Alloy Structure Equivalency – Phase Formation and Identification – Mechanical Strength – Hardness –Part Failure Analysis – Fatigue – Creep and Stress Rupture – Environmentally Induced Failure		3

1020236247	REVERSE ENGINEERING	L	T	P	C
PRACTICUM		1	0	4	3

Practical: **4.** Structural Rigidity Testing: Conduct bending and torsion tests on Automobile body frames to determine their structural rigidity. Compare different frame designs and materials to identify the most robust and lightweight options.		5
Unit IV	**RAPID PROTOTYPING(RP)**	
Theory:, Introduction, current RP techniques and materials, Stereo Lithography, Selective Laser Sintering, Fused Deposition Modeling, Three-dimensional Printing, Laminated Object Manufacturing, Multijet Modeling.		3
Practical: 5. Crash Testing Simulation: Utilize crash test dummies and acceleration sensors to simulate vehicle collisions. Study how different body designs and materials affect passenger safety and structural integrity during impact. 6. Prepare case study report - Rapid Prototyping – Any one mechanical Machine components (Impeller, Engine Block, Piston and Door Pad)		12
Unit V	**INDUSTRIAL APPLICATIONS**	
Theory: Reverse Engineering in the Automotive Industry; Aerospace Industry. Case studies and Solving Industrial projects in Reverse Engineering. Legality: Patent – Copyrights –Trade Secret – Third-Party Materials.		3
Practical: 7. Prepare case study report – Patent 8. Prepare case study report – Copy rights 9. Prepare case study report – Trade Mark		15
Assessment + Revision		**10**
TOTAL		**75**

Text and Reference Books:

1. Reverse Engineering: An Industrial Perspective by V. Raja and K. Fernandes, Springer-Verlag.Wego

1020236247	REVERSE ENGINEERING	L	T	P	C
PRACTICUM		1	0	4	3

2. Kevin Otto , “Product Design : Techniques in Reverse Engineering and New Product Development”, ISBN-13: 9788177588217, Dorling Kindersley

3. Robert Messler, “Reverse Engineering: Mechanisms, Structures, Systems & Materials”, McGraw Hill Education, ISBN: 9780071825160

4. Reverse Engineering by K. A. Ingle, McGraw-Hill.

5. Raja, Vinesh, Fernandes, Kiran J. , “Reverse Engineering An Industrial Perspective” ISBN 978-1-84628-856-2, Springer

END SEMESTER EXAMINATION - Practical Exam

Note:

All the exercises should be completed before the Board Practical Examinations. End Semester Practical examination should be conducted for all the exercises / experiments for 100 Marks. Students will be permitted to select any one exercise by lot or question paper supplied by the DOTE Exam section shall be used. The practical document prepared by the student should be submitted with a Bonafide Certificate.

SCHEME OF EVALUATION

PART	DESCRIPTION	MARKS
A	Aim & Apparatus Required	10
B	Procedure / Explanation	20
C	Presentation	20
D	Result	10
E	Written Test	30
F	Viva Voce	10
TOTAL		100

Note: For the written test 30 MCQ shall be asked from the theory portions.

1020236248	Green Energy & Engineering	L	T	P	C
PRACTICUM		1	0	4	3

Introduction:

Traditional energy sources such as coal, oil, and natural gas contribute significantly to greenhouse gas emissions, air pollution, and environmental degradation. By transitioning to green energy sources such as solar, wind, hydroelectric, and biomass, engineers can mitigate these harmful effects while meeting the growing global demand for energy. The green energy projects often have lower life cycle carbon footprints compared to conventional energy sources, making them essential for achieving climate targets and promoting sustainable development. In essence, incorporating green energy into engineering practices is not only necessary for addressing environmental concerns but also essential for creating a resilient, equitable, and prosperous future for all.

Course Objectives:

The objective of this course is to prepare the student,

- To impart knowledge on solar energy collection and to demonstrate practical applications and benefits of solar panels and energy storage systems.
- To understand the principles of wind energy and biomass energy.
- To impart knowledge about geothermal heat pumps, ocean thermal energy conversion (OTEC), and their feasibility.
- To provide fundamental principles of energy-efficient appliances, building designs, and smart systems.
- To acquire knowledge regarding sustainable manufacturing process and to explore on eco-friendly production processes, materials, and waste reduction strategies.

Course Outcomes

On successful completion of this course, student will be able to

On successful completion of this course, the students will be able to,

CO1 - Acquire the knowledge of the principles of solar energy conversion and their benefits.

CO2 - Enable for building a small range of wind energy conversion system.

CO3 - Gain knowledge on the various classification of energy sources and their environmental issues.

1020236248	Green Energy & Engineering	L	T	P	C
PRACTICUM		1	0	4	3

CO4 - Analyze the limitless availability of green energy sources and understand the challenges in renewable hybrid system.

CO5 - learn hydrogen production method, storage methods and waste reduction strategies.

Pre-requisites:

Knowledge of basic energy sources.

CO/PO Mapping

CO / PO	PO1	PO2	PO3	PO4	PO5	PO6	PO7
CO1	3	3	2	1	1	-	1
CO2	3	3	2	2	1	-	1
CO3	3	2	2	1	1	-	1
CO4	3	1	-	1	1	1	1
CO5	3	1	-	1	1	1	2

Legend: 3-High Correlation, 2-Medium Correlation, 1-Low Correlation

Instructional Strategy:

- It is advised that teachers take steps to pique pupils' attention and boost their curiosity to learn.
- Implement task-based learning activities where students work on specific tasks or projects.
- Incorporate technology tools and resources, such as online platforms, interactive multimedia and virtual communication tools, to enhance engagement and provide additional practice opportunities.
- Incorporate formative and summative assessments to gauge student progress and provide targeted feedback.

1020236248	**Green Energy & Engineering**	L	T	P	C
PRACTICUM		1	0	4	3

- Throughout the course, a theory-demonstrate-practice-activity strategy may be used to ensure that learning is outcome and employability based.
- All demonstrations/Hand-on practices may be followed in the real environment as far as possible.

Assessment Methodology:

	Continuous Assessment (40 marks)				**End Semester Examination (60 marks)**
	CA1	**CA2**	**CA3**	**CA4**	
Mode	Practical Test	Practical Test	Written Test Theory	Practical Test	Practical Examination
Portion	Cycle I Exercises	Cycle II Exercises	All Portions	All Exercises	All Exercises Experiments
Duration	2 Periods	2 Periods	3 Hours	3 Hours	3 hours
Exam Marks	60	60	100	100	100
Converted to Marks	10	10	15	15	60
Marks	10		15	15	60
Internal Marks	40				
Tentative Schedule	7th Week	14th Week	15th Week	16th Week	

Note:

CA1 and CA2: All the exercises/experiments should be completed as per the portions above and kept for the practical test. The students shall be permitted to select any one by lot for the test. The practical test should be conducted as per the scheme of evaluation as below. The

marks awarded shall be converted to 10 Marks for each assessment test. Best of one will be considered for the internal assessment of 10 Marks.

Practical documents should be maintained for every experiment immediately after completion of the practice. The practical document should be submitted for the practical test. The same should be evaluated for 10 Marks for each exercise/experiment. The total marks awarded should be converted to 10 Marks for the practical test as per the scheme of evaluation as below.

The details of the documents to be prepared as per the instruction below.

Each exercise should be completed on the day of practice. The same shall be evaluated for 10 marks on the day or next day of practice before commencement of the next experiment.

This documentation can be carried out in a separate notebook or a printed manual or a file with documents. The Procedure, Sketch and Result / Output should be written by the student manually in the documents.

The detailed date of the practices and its evaluations should be maintained in the course logbook. The log book and the practical documents should be submitted for the verification by the Flying Squad and DoTE Official.

SCHEME OF EVALUATION

PART	DESCRIPTION	MARKS
A	Aim / Procedure	10
B	Block diagram / Explanation	20
C	Presentation / Report	20
	TOTAL	50
D	Practical Documents (As per the portions)	10
		60

1020236248	**Green Energy & Engineering**	L	T	P	C
PRACTICUM		1	0	4	3

Cycle - I - Exercise 1, 2, 3,4 and 5.

Cycle - II - Exercise 6, 7, 8, 9 and 10.

CA 3: Written Test for complete theory portions should be conducted for 100 Marks as per the question pattern below. The marks scored will be converted to 15 Marks for internal assessment.

Question pattern – Written Test Theory

Description		**Marks**	
Part – A	30 MCQ Questions.	30 X 1 Mark	30 Marks
Part – B	7 Questions to be answered out of 10 Questions.	7 X 10 Marks	70 Marks
TOTAL			100 Marks

CA 4: All the exercises/experiments should be completed and kept for the practical test. The students shall be permitted to select any one by lot for the test. The practical test should be conducted as per the scheme of evaluation below. After completion of all the exercises the practical test should be conducted as per End Semester Examination question pattern scheme of evaluation. The marks awarded should be converted to 15 Marks for the internal assessment.

1020236248	Green Energy & Engineering	L	T	P	C
PRACTICUM		1	0	4	3

SCHEME OF EVALUATION

Model Practical Examination and End Semester Examination - Practical Exam

PART	DESCRIPTION	MARKS
A	Aim / Procedure	10
B	Block diagram / Explanation	20
C	Presentation / Report	20
D	Result / Output	10
E	Written Test (Theory Portions)	30
F	Viva Voce	10
TOTAL		100

Note: For the written test 30 MCQ shall be asked from the theory portions.

Syllabus Contents

UNIT I	**SOLAR ENERGY & WIND ENERGY**	
INTRODUCTION Overview of conventional & renewable energy sources, types of renewable energy systems, Future of Energy Use, Present Indian and international energy scenario of conventional and RE sources, Energy for sustainable development, Environmental Aspects of Energy, Limitations of RE sources. **SOLAR ENERGY & WIND ENERGY** Theory of solar cells - Concept of Solar PV systems - Flat plate and concentrating collectors, Solar PV Applications - solar heating/cooling technique, solar distillation and solar drying, solar cookers. Energy from Wind - Horizontal axis Wind Turbine -		7

1020236248	**Green Energy & Engineering**	L	T	P	C
PRACTICUM		1	0	4	3

Vertical Axis Wind Turbine - Wind Energy Conversion Systems	
Familiarization with Different Solar Energy Gadgets	
Exercise 1: Study of Solar Distillation System	5
Exercise 2: Performance test on Solar Cooker	5
Exercise 3: Performance analysis of Solar Water Heater	5
Exercise 4: Performance test on Solar Dryer	5
Exercise 5: Performance Evaluation on Solar Lighting System	5

UNIT II	**GEOTHERMAL ENERGY, BIOMASS, HYDROGEN STORAGE, ENERGY EFFICIENT SYSTEMS & GREEN MANUFACTURING SYSTEMS**
OCEAN ENERGY, BIO-MASS ENERGY & HYDROGEN PRODUCTION OTEC, Principles of utilization, setting of OTEC plants - Tidal and wave energy. Principles of bio-conversion - types of bio-gas digesters, gas yield, utilization for cooking, bio fuels, I.C. engine operation and economic aspects. Chemical Production of Hydrogen- Electrolytic Hydrogen- Thermolytic Hydrogen- Photolytic Hydrogen- Photobiologic Hydrogen Production **ENERGY EFFICIENT & GREEN MANUFACTURING SYSTEMS** Energy efficient motors, energy efficient lighting and control. Fuel cells- principle, thermodynamic aspects, selection of fuels & working of various types of fuel cells, Environmental friendly and Energy efficient compressors and pumps. Environmental impact of the current manufacturing practices and systems, benefits of green manufacturing systems, selection of recyclable and environment friendly materials in manufacturing, Sustainable green production systems - alternate casting and joining techniques, zero waste manufacturing.	8
Exercise 6: Study on the Production Process of Bio-Fuels	5
Exercise 7: Study on the Floating Drum & Fixed Drum Biogas Plants	5

1020236248	**Green Energy & Engineering**	L	T	P	C
PRACTICUM		1	0	4	3

Exercise 8: Study on the various Bio-mass energy conservation technologies.	5
Exercise 9: Study on Production Process of Briquettes	5
Exercise 10: Performance test on BIO Diesel using blend analyzer	5
Revision + Assessment Test	10

Text and Reference Books:

1. D. S. Chauhan & S. K. Srivastava, Non-Conventional Energy Resources, New Age International Private Limited, 4 th Edition, 2021.
2. John Twidell & Tony Weir, Renewable Energy Resources, Routledge; 3 rd Edition, 2015.
3. D.P. Kothari, K.C. Singal & Rakesh Ranjan, Renewable Energy Sources and Emerging Technologies, PHI Learning; 3 rd Edition, 2022.
4. Ritu Dogra, Renewable Energy and Green Technology, Brillion Publishing, 1 st Edition, 2023.
5. Soli J. Arceivala, Green Technologies, McGraw Hill Education (India) Private Limited, 1 st Edition, 2017.
6. Chandan Deep Singh & Harleen Kaur, Sustainable Green Development and Manufacturing Performance through Modern Production Techniques, Taylor & Francis Ltd, 1 st Edition, 2021.

Web and Online Resources

- https://onlinecourses.nptel.ac.in/noc21_ch11/preview

1020236248	Green Energy & Engineering	L	T	P	C
PRACTICUM		1	0	4	3

END SEMESTER EXAMINATION - Practical Exam

Note:

All the exercises should be completed before the Board Practical Examinations. End Semester Practical examination should be conducted for all the exercises / experiments for 100 Marks. Students will be permitted to select any one exercise by lot or question paper supplied by the DOTE Exam section shall be used. The practical document prepared by the student should be submitted with a Bonafide Certificate.

SCHEME OF EVALUATION

PART	DESCRIPTION	MARKS
A	Aim & Apparatus Required	10
B	Procedure / Explanation	20
C	Presentation	20
D	Result	10
E	Written Test (Theory Portions)	30
F	Viva Voce	10
TOTAL		100

Note: For the written test 30 MCQ shall be asked from the theory portions.

1020236248	Green Energy & Engineering	L	T	P	C
PRACTICUM		1	0	4	3

List of Equipment required.

S.No	Name of the Equipment	Quantity required
1	Solar PV Panel	1
2	Solar Current lamp	2
3	PV analyser	1
4	Solar Irradiation Meter	1
5	Solar Cooker	1
6	RTD - 2 mts	10 Qty
7	Solar Dryer	1
8	Pyranometer	2
9	Axial Fan	1
10	Biodiesel	2 lt
11	Biodiesel blend analyse	1
12	Solar Water Heater	1
Consumables and instruments		Sufficient quantity

1020236351	Internship	540 Periods	C
PROJECT			12

Introduction

Internships in educational institutions are designed to provide students with practical experience in their field of study and to bridge the gap between academic knowledge and professional practice.

Objectives

After completing Internship, Interns will be able to,

- Apply the theoretical knowledge and skill during performance of the tasks assigned in internship.
- Demonstrate soft skills such as time management, positive attitude and communication skills during performance of the tasks assigned in internship.
- Document the Use case on the assigned Task.
- Enable interns to apply theoretical knowledge gained in the classroom to real-world practical applications.
- Provide hands-on experience in the industrial practices.
- Develop essential skills such as communication, organization, teamwork, and problem-solving.
- Enhance specific skills related to the intern's area of focus.
- Offer a realistic understanding of the daily operations and responsibilities.
- Provide opportunities to work under the guidance of experienced supervisors and administrators.
- Allow interns to explore different career paths.
- Help interns make informed decisions about their future career goals based on first hand experience.
- Facilitate the establishment of professional relationships with supervisor, administrators, and other professionals in the field.

1020236351	Internship	540 Periods	C
PROJECT			12

- Provide access to a network of contacts that can be beneficial for future job opportunities and professional growth.
- Foster personal growth by challenging interns to step out of their comfort zones and take on new responsibilities.
- Build confidence and self-efficacy through successful completion of internship tasks and projects.
- Give insight into the policies, regulations, and administrative practices.
- Allow interns to observe and understand the implementation of standards and policies in practice.
- Provide opportunities for constructive feedback from supervisors and mentors, aiding in the intern's professional development.
- Enable self-assessment and reflection on strengths, areas for improvement, and career aspirations.
- Encourage sensitivity to the needs and backgrounds of different groups, promoting inclusive and equitable industrial practices.

Course Outcomes

CO 1: Demonstrate improved skills.

CO 2: Exhibit increased professional behavior.

CO 3: Apply theoretical knowledge and principles in real-world practices.

CO 4: Develop and utilize assessment tools to evaluate the learning and practices.

CO 5: Engage in reflective practice to continually improve their learning and professional growth.

Facilitating the Interns by an Internship Provider.

Orient intern in the new workplace. Give interns an overview of the organization, Explain the intern's duties and introduce him or her to co-workers.

1020236351	Internship	540 Periods	C
PROJECT			12

Develop an internship job description with clear deliverables and timeline.

Allow the interns in meetings and provide information, resources, and opportunities for professional development.

The interns have never done this kind of work before, they want to know that their work is measuring up to organizational expectations, hence provide professional guidance and mentoring to the intern.

Daily progress report of Intern is to be evaluated by industry supervisor. examine what the intern has produced and make suggestions. Weekly supervision meetings can help to monitor the intern's work.

Duties Responsibilities of the Faculty Mentor

To facilitate the placement of students for the internship

To liaison between the college and the internship provider

To assist the Industrial Training Supervisor during assessment

Instructions to the Interns

- Students shall report to the internship provider on the 1st day as per the internship schedule.
- Intern is expected to learn about the organization, its structure, product range, market performance, working philosophy etc.
- The interns shall work on live projects assigned by the internship provider.
- The Intern shall record all the activities in the daily log book and get the signature of the concerned training supervisor.
- Intern shall have 100% attendance during internship programme. In case of unavoidable circumstances students may avail leave with prior permission from the concerned training supervisor of the respective internship provider. However, the maximum leave permitted during internship shall be as per company norms where they are working and intern shall report the leave sanctioned details to their college faculty mentor.

1020236351	Internship	540 Periods	C
PROJECT			12

- The interns shall abide all the Rules and Regulations of internship provider
- Intern shall follow all the safety Regulations of internship provider.
- On completion of the internship, the intern shall report to the college and submit the internship certificate mentioning duration of internship, evaluation of interns by internship provider, Student's Diary and Comprehensive Training Report.

Attendance Certification

Every month students have to get their attendance certified by the industrial supervisor in the prescribed form supplied to them. Students have also to put their signature on the form and submit it to the institution supervisor. Regularity in attendance and submission of report will be duly considered while awarding the Internal Assessment mark.

Training Reports

The students have to prepare two types of reports: Weekly reports in the form of a diary to be submitted to the concerned staff in-charge of the institution. This will be reviewed while awarding Internal

Industrial Training Diary

Students are required to maintain the record of day-to-day work done. Such a record is called Industrial training Diary. Students have to write this report regularly. All days for the week should be accounted for clearly giving attendance particulars (Presence, absence, Leave, Holidays etc.). The concern of the Industrial supervisor is to periodically check these progress reports.

Comprehensive Training Report

In addition to the diary, students are required to submit a comprehensive report on training with details of the organisation where the training was undergone after attestation by the supervisors. The comprehensive report should incorporate study of plant/product/process/construction along with intensive in-depth study on any one of

1020236351	Internship	540 Periods	C
PROJECT			12

the topics such as processes, methods, tooling, construction and equipment, highlighting aspects of quality, productivity and system. The comprehensive report should be completed in the last week of Industrial training.

Any data, drawings etc. should be incorporated with the consent of the Organisation.

Scheme of Evaluation

Internal Assessment

Students should be assessed for 50 Marks by industry supervisor and polytechnic faculty mentor during 8th Week and 15th Week. The total marks (50 + 50) scored shall be converted to 40 marks for the Internal Assessment.

Sl. No.	Description	Marks
A	Punctuality and regularity. (Attendance)	10
B	Level / proficiency of practical skills acquired. Initiative in learning / working at site	10
C	Ability to solve practical problems. Sense of responsibility	10
D	Self expression / communication skills. Interpersonal skills / Human Relation.	10
E	Report and Presentation.	10
Total		50

1020236351	**Internship**	540 Periods	C
PROJECT			12

End Semester Examination - Project Exam

Students should be assessed for 100 Marks both by the internal examiner and external examiner appointed by the Chairman Board of Examinations after the completion of internship period (Dec - May). The marks scored will be converted to 60 marks for the End Semester Examination.

Sl. No.	Description	Marks
A	Daily Activity Report.	20
B	Comprehensive report on Internship, Relevant Internship Certificate from the concerned department.	30
C	Presentation by the student at the end of the Internship.	30
D	Viva Voce	20
Total		100

1020236353	**Fellowship**	540 Periods	C
PROJECT			12

Introduction

The Fellowship in the Diploma in Engineering program is designed to provide aspiring engineers with a comprehensive educational experience that combines theoretical knowledge with practical skills. This fellowship aims to cultivate a new generation of proficient and innovative engineers who are equipped to meet the challenges of a rapidly evolving technological landscape.

Participants in this fellowship will benefit from a robust curriculum that covers core engineering principles, advanced technical training, and hands-on projects. The program emphasizes interdisciplinary learning, encouraging fellows to explore various branches of engineering, from mechanical and civil to electrical, electronics & communication and computer engineering. This approach ensures that graduates possess a versatile skill set, ready to adapt to diverse career opportunities in the engineering sector.

In addition to academics, the fellowship offers numerous opportunities for professional development. Fellows will engage with industry experts through seminars, workshops, and internships, gaining valuable insights into real-world applications of their studies. Collaborative projects and research initiatives foster a culture of innovation, critical thinking, and problem-solving, essential attributes for any successful engineer.

By offering this fellowship, participants become part of a vibrant community of learners and professionals dedicated to advancing the field of engineering. The program is committed to supporting the growth and development of each fellow, providing them with the tools and resources needed to excel both academically and professionally.

The Fellowship in the Diploma in Engineering is more than just an educational endeavor; it is a transformative journey that equips aspiring engineers with the knowledge, skills, and experiences necessary to make significant contributions to society and the engineering profession.

1020236353	**Fellowship**	540 Periods	C
PROJECT			12

Objectives

After completing students will be able to,

- Provide fellows with a solid foundation in core engineering principles and advanced technical knowledge across various engineering disciplines.
- Equip fellows with hands-on experience through laboratory work, projects, and internships, ensuring they can apply theoretical knowledge to real-world scenarios.
- Promote interdisciplinary understanding by encouraging exploration and integration of different engineering fields, fostering versatility and adaptability in fellows.
- Encourage innovation and creativity through research projects and collaborative initiatives, enabling fellows to develop new solutions to engineering challenges.
- Facilitate professional growth through workshops, seminars, and interactions with industry experts, preparing fellows for successful careers in engineering.
- Develop critical thinking and problem-solving skills, essential for tackling complex engineering problems and making informed decisions.
- Strengthen connections between academia and industry by providing opportunities for internships, industry visits, and guest lectures from professionals.
- Foster leadership qualities and teamwork skills through group projects and collaborative activities, preparing fellows for leadership roles in their future careers.
- Instill a sense of ethical responsibility and awareness of the social impact of engineering practices, encouraging fellows to contribute positively to society.
- Promote a culture of lifelong learning, encouraging fellows to continually update their knowledge and skills in response to technological advancements and industry trends.
- Prepare fellows to work in a global engineering environment by exposing them to international best practices, standards, and cross-cultural experiences.

1020236353	**Fellowship**	540 Periods	C
PROJECT			12

Course Outcomes

CO 1: Demonstrate a strong understanding of core engineering principles and possess the technical skills necessary to design, analyze, and implement engineering solutions across various disciplines.

CO 2: Apply theoretical knowledge to practical scenarios, effectively solving engineering problems through hands-on projects, laboratory work, and internships.

CO 3: Exhibit the ability to conduct research, develop innovative solutions, and contribute to advancements in engineering through critical thinking and creative approaches to complex challenges.

CO 4: Understand and adhere to professional and ethical standards in engineering practice, demonstrating responsibility, integrity, and a commitment to sustainable and socially responsible engineering.

CO 5: Enhance strong communication skills, both written and verbal, and be capable of working effectively in teams, demonstrating leadership and collaborative abilities in diverse and multidisciplinary environments.

Important points to consider to select the fellowship project.

Selecting the right fellowship project is crucial for maximizing the educational and professional benefits of a Diploma in Engineering program.

- **Relevance to Future Plans**: Choose a project that aligns with your long-term career aspirations and interests. This alignment will ensure that the skills and knowledge you gain will be directly applicable to your desired career path.
- **Industry Relevance**: Consider the current and future relevance of the project within the industry. Opt for projects that address contemporary challenges or emerging trends in engineering.
- **Access to Facilities**: Ensure that the necessary facilities, equipment, and materials are available to successfully complete the project. Lack of resources can hinder the progress and quality of your work.

1020236353	**Fellowship**	540 Periods	C
PROJECT			12

- **Mentorship and Guidance**: Select a project that offers strong mentorship and support from experienced faculty members or industry professionals. Effective guidance is crucial for navigating complex problems and achieving project objectives.
- **Project Scope**: Assess the scope of the project to ensure it is neither too broad nor too narrow. A well-defined project scope helps in setting clear objectives and achievable milestones.
- **Feasibility**: Evaluate the feasibility of completing the project within the given timeframe and with the available resources. Consider potential challenges and ensure you have a realistic plan to address them.
- **Technical Skills**: Choose a project that allows you to develop and enhance important technical skills relevant to your field of study. Practical experience in using specific tools, technologies, or methodologies can be highly beneficial.
- **Soft Skills**: Consider projects that also offer opportunities to develop soft skills such as teamwork, communication, problem-solving, and project management.
- **Innovative Thinking**: Select a project that encourages creativity and innovative problem-solving. Projects that push the boundaries of traditional engineering approaches can be particularly rewarding.
- **Societal Impact**: Consider the potential impact of your project on society or the engineering community. Projects that address significant challenges or contribute to social good can be highly fulfilling and make a meaningful difference.

Guidelines to select Fellowship

- Ensure the program is accredited by a recognized accrediting body and has a strong reputation for quality education in engineering.
- Ensure it covers core engineering principles that align with your interests and career goals.
- Investigate the qualifications and experience of the faculty mentor. Look for programs with faculty who have strong academic backgrounds, industry experience, and active involvement in research.

1020236353	**Fellowship**	540 Periods	C
PROJECT			12

- Check if the program provides adequate hands-on training opportunities, such as laboratory work, workshops, and access to modern engineering facilities and equipment.
- Assess the program's connections with industry. Strong partnerships with companies can lead to valuable internship opportunities, industry projects, and exposure to real-world engineering challenges.
- Explore the availability of research opportunities. Participation in research projects can enhance your learning experience and open doors to innovative career paths.
- Look for programs that offer professional development resources, such as workshops, seminars, and networking events with industry professionals and alumni.
- Ensure the program provides robust support services, including academic advising, career counseling, mentorship programs, and assistance with job placement after graduation.
- Consider the cost of the program and available financial aid options, such as scholarships, grants, and fellowships. Evaluate the return on investment in terms of career prospects and potential earnings.
- Research the success of the program's alumni. High employment rates and successful careers of past graduates can indicate the program's effectiveness in preparing students for the engineering field.

Duties Responsibilities of the Faculty Mentor

Each student should have a faculty mentor for the Institute.

- Get the approval from the Chairman Board of Examinations with the recommendations of the HOD/Principal for the topics.
- Provide comprehensive academic advising to help fellows select appropriate specializations, and research projects that align with their interests and career goals.
- Guide fellows through their research projects, offering expertise and feedback to ensure rigorous methodology, innovative approaches, and meaningful contributions to the field.
- Assist fellows in developing technical and professional skills through hands-on projects, laboratory work, and practical applications of theoretical knowledge.

1020236353	**Fellowship**	540 Periods	C
PROJECT			12

- Offer career advice and support, helping fellows explore potential career paths, prepare for job searches, and connect with industry professionals and opportunities.
- Provide personal mentorship, fostering a supportive relationship that encourages growth, resilience, and a positive academic experience.
- Facilitate connections between fellows and industry professionals, alumni, and other relevant networks to enhance their professional opportunities and industry exposure.
- Ensure fellows have access to necessary resources, including research materials, lab equipment, software, and academic literature.
- Regularly monitor and evaluate the progress of fellows, providing constructive feedback and guidance to help them stay on track and achieve their goals.
- Instill and uphold high ethical and professional standards, encouraging fellows to practice integrity and responsibility in their work.
- Assist with administrative tasks related to the fellowship program, such as preparing progress reports, writing recommendation letters, and facilitating grant applications.
- Organize and participate in workshops, seminars, and other educational events that enhance the learning experience and professional development of fellows.
- Address any issues or conflicts that arise, providing mediation and support to ensure a positive and productive academic environment.

Instructions to the Fellowship Scholar

- Regularly meet with your faculty mentor for guidance on academic progress, research projects, and career planning. Be proactive in seeking advice and support from your mentor.
- Develop strong organizational skills. Use planners, calendars, and task management tools to keep track of assignments, project deadlines, and study schedules. Prioritize tasks to manage your time efficiently.
- Take advantage of opportunities to participate in research projects and hands-on activities. These experiences are crucial for applying your theoretical knowledge and gaining practical skills.

1020236353	**Fellowship**	540 Periods	C
PROJECT			12

- Focus on improving essential professional skills such as communication, teamwork, problem-solving, and leadership. Participate in workshops and seminars that enhance these competencies.
- Actively seek networking opportunities through industry events, seminars, and meetings. Establish connections with peers, alumni, and professionals in your field to build a strong professional network.
- Seek internships, co-op programs, or part-time jobs related to your field of study. Real-world experience is invaluable for understanding industry practices and enhancing your employability.
- Uphold high ethical standards in all your academic and professional activities. Practice integrity, honesty, and responsibility. Adhere to the ethical guidelines and standards set by your institution and the engineering profession.
- Adopt a mindset of lifelong learning. Stay updated with the latest developments and trends in engineering by reading industry journals, attending conferences, and taking additional courses.

Documents to be submitted by the student to offer fellowship.

- **Completed Application Form**: This is typically the standard form provided by the institution or fellowship program that includes personal information, educational background, and other relevant details.
- **Detailed CV/Resume**: A comprehensive document outlining your educational background, knowledge experience, interest in research experience, publications, presentations, awards, and other relevant achievements if any.
- **Personal Statement**: A document explaining your motivation for applying to the fellowship, your career goals, how the fellowship aligns with those goals, and what you intend to achieve through the program.
- **Recommendation Letters**: Letters from faculty mentor, employer, or professionals who can attest to your academic abilities, professional skills, and suitability for the fellowship.

1020236353	**Fellowship**	540 Periods	C
PROJECT			12

- **Proposal/Description**: A detailed proposal or description of the fellowship project or study you plan to undertake during the fellowship. This should include objectives, methodology, expected outcomes, and significance of the project.
- **Enrollment Verification**: Documentation verifying your current acceptance status in the academic institution or industry where the fellowship will be conducted.
- **Funding Information**: Details about any other sources of funding or financial aid you are receiving, if applicable. Some fellowships may also require a budget proposal for the intended use of the fellowship funds.
- **Samples of Work**: Copies of the relevant work that demonstrates your capabilities and accomplishments in your field.
- **Endorsement Letter**: A letter from your current academic institution endorsing your application for the fellowship, if required.
- **Ethical Approval Documents**: If your research involves human subjects or animals, you may need to submit proof of ethical approval from the relevant ethics committee.
- **Additional Documents**: Any other documents requested by the fellowship program required by the institution.

Attendance Certification

Every month students have to get their attendance certified by the supervisor in the prescribed form supplied to them. Students have also to put their signature on the form and submit it to the faculty mentor. Regularity in attendance and submission of report will be duly considered while awarding the Internal Assessment mark.

1020236353	**Fellowship**	540 Periods	C
PROJECT			12

Rubrics for Fellowship. Review I & II.

Sl. No.	Topics	Description
1	Alignment with Objectives	Assess how well the project aligns with the stated objectives and requirements. Determine if the student has addressed the key aspects outlined in the project guidelines.
2	Depth of Research:	Evaluate the depth and thoroughness of the literature review. Assess the student's ability to identify and address gaps in existing research.
3	Clarity of Objectives:	Check if the student has clearly defined and articulated the objectives of the project. Ensure that the objectives are specific, measurable, achievable, relevant, and time-bound (SMART).
4	Methodology and Data Collection:	Evaluate the appropriateness and justification of the research methodology. Assess the methods used for data collection and their relevance to the research questions.
5	Analysis and Interpretation:	Examine the quality of data analysis techniques used. Assess the student's ability to interpret results and draw meaningful conclusions.
6	Project Management:	Evaluate the project management aspects, including adherence to timelines and milestones. Assess the student's ability to plan and execute the project effectively.

1020236353	**Fellowship**	540 Periods	C
PROJECT			12

7	Documentation and Reporting:	Check the quality of documentation, including code, experimental details, and any other relevant materials. Evaluate the clarity, structure, and coherence of the final report.
8	Originality and Creativity:	Assess the level of originality and creativity demonstrated in the project. Determine if the student has brought a unique perspective or solution to the research problem.
9	Critical Thinking:	Evaluate the student's critical thinking skills in analyzing information and forming conclusions. Assess the ability to evaluate alternative solutions and make informed decisions.
10	Problem-Solving Skills:	Evaluate the student's ability to identify and solve problems encountered during the project. Assess adaptability and resilience in the face of challenges.

1020236353	**Fellowship**	540 Periods	C
PROJECT			12

INTERNAL MARKS - 40 Marks

As per the rubrics each topic should be considered for the Review I and Review II. Equal weightage should be given for all the topics. It should be assessed by a faculty mentor and the industrial professional or research guide.

Review 1 shall be conducted after 8th week and Review 2 shall be conducted after 14th week in the semester. Average marks scored in the reviews shall be considered for the internal assessment of 30 Marks.

Scheme of Evaluation

PART	DESCRIPTION	MARKS
A	Assessment as per the rubrics.	30
B	Attendance	10
Total		**40**

1020236353	**Fellowship**	540 Periods	C
PROJECT			12

END SEMESTER EXAMINATION - Project Exam

Students should be assessed for 100 Marks both by the internal examiner and external examiner appointed by the Chairman Board of Examinations after the completion of fellowship. The marks scored will be converted to 60 marks for the End Semester Examination.

Sl. No.	Description	Marks
A	Daily Activity Report.	20
B	Comprehensive report of the Fellowship Work.	30
C	Presentation by the student.	30
D	Viva Voce	20
Total		100

1020236374	**In-house Project**	540 Periods	C
PROJECT			12

Introduction

Every student must do one major project in the Final year of their program. Students can do their major project in Industry or R&D Lab or in-house or a combination of any two for the partial fulfillment for the award of Diploma in Engineering.

For the project works, the Department will constitute a three-member faculty committee to monitor the progress of the project and conduct reviews regularly.

If the projects are done in-house, the students must obtain the bonafide certificate for project work from the Project supervisor and Head of the Department, at the end of the semester. Students who have not obtained the bonafide certificate are not permitted to appear for the Project Viva Voce examination.

For the projects carried out in Industry, the students must submit a separate certificate from Industry apart from the regular bonafide certificate mentioned above. For Industry related projects there must be one internal faculty advisor / Supervisor from Industry (External), this is in addition to the regular faculty supervision.

The final examination for project work will be evaluated based on the final report submitted by the project group **of not exceeding four students**, and the viva voce by an external examiner.

Objectives

Academic project work plays a crucial role in the education of Diploma in Engineering students, as it helps them apply theoretical knowledge to practical situations and prepares them for real-world engineering challenges.

- **Integration of Knowledge**: Consolidate and integrate theoretical knowledge acquired in coursework to solve practical engineering problems.
- **Skill Development**: Enhance technical skills related to the specific field of engineering through hands-on experience and application.
- **Problem-Solving Abilities**: Develop critical thinking and problem-solving abilities by addressing complex engineering issues within a defined scope.

1020236374	**In-house Project**	540 Periods	C
PROJECT			12

- **Project Management**: Gain experience in project planning, execution, and management, including setting objectives, timelines, and resource allocation.
- **Teamwork and Collaboration**: Foster teamwork and collaboration by working in multidisciplinary teams to achieve project goals and objectives.
- **Research Skills**: Acquire research skills by conducting literature reviews, gathering relevant data, and applying research methodologies to investigate engineering problems.
- **Innovation and Creativity**: Encourage innovation and creativity in proposing and developing engineering solutions that may be novel or improve upon existing methods.
- **Communication Skills**: Improve communication skills, both oral and written, by presenting project findings, writing technical reports, and effectively conveying ideas to stakeholders.
- **Ethical Considerations**: Consider ethical implications related to engineering practices, including safety, environmental impact, and societal concerns.
- **Professional Development**: Prepare for future professional roles by demonstrating professionalism, initiative, and responsibility throughout the project lifecycle.

Course Outcomes

CO 1: Demonstrate the ability to apply theoretical concepts and principles learned in coursework to solve practical engineering problems encountered during the project.

CO 2: Develop and enhance technical skills specific to the field of engineering relevant to the project, such as design, analysis, simulation, construction, testing, and implementation.

CO 3: Apply critical thinking and problem-solving skills to identify, analyze, and propose solutions to engineering challenges encountered throughout the project lifecycle.

CO 4: Acquire project management skills by effectively planning, organizing, and executing project tasks within defined timelines and resource constraints.

CO 5: Improve communication skills through the preparation and delivery of project reports, presentations, and documentation that effectively convey technical information to stakeholders.

1020236374	**In-house Project**	540 Periods	C
PROJECT			12

Important points to consider to select the In-house project.

- Selecting a project work in Diploma Engineering is a significant decision that can greatly influence your learning experience and future career prospects.
- Choose a project that aligns with your career aspirations and interests within the field of engineering. Consider how the project can contribute to your professional development and future opportunities.
- Ensure the project aligns with your coursework and specialization within the Diploma program. It should complement and build upon the knowledge and skills you have acquired in your studies.
- Evaluate the scope of the project to ensure it is manageable within the given timeframe, resources, and constraints. Avoid projects that are overly ambitious or impractical to complete effectively.
- Assess the availability of resources needed to conduct the project, such as equipment, materials, laboratory facilities, and access to relevant software or tools. Lack of resources can hinder project progress.
- Select a project that genuinely interests and motivates you. A project that captures your curiosity and passion will keep you engaged and committed throughout the project duration.
- Consider the availability and expertise of faculty advisors or industry mentors who can provide guidance and support throughout the project. Effective mentorship is crucial for success.
- Clearly define the learning objectives and expected outcomes of the project. Ensure that the project will help you achieve specific learning goals related to technical skills, problem-solving, and professional development.
- Look for opportunities to propose innovative solutions or explore new methodologies within your project. Projects that encourage creativity can set you apart and enhance your learning experience.

- Consider ethical implications related to the project, such as safety protocols, environmental impact, and compliance with ethical guidelines in research and engineering practices.
- Evaluate whether the project offers opportunities for collaboration with peers, experts from other disciplines, or industry partners. Interdisciplinary projects can broaden your perspective and enhance your teamwork skills.
- Consider the potential impact of your project on society or the engineering community. Projects that address significant challenges or contribute to social good can be highly fulfilling and make a meaningful difference.

By carefully considering these points, Diploma Engineering students can make informed decisions when selecting project work that not only enhances their academic learning but also prepares them for successful careers in engineering.

Duties Responsibilities of the internal faculty advisor.

Each group should have an internal faculty advisor assigned by the HOD/Principal.

- The in-house project should be approved by the project monitoring committee constituted by the Chairman Board of Examinations.
- The in-house project should be selected in the fifth semester itself. Each in-house project shall have a maximum of four students in the project group.
- Provide comprehensive academic advising to help in the selection of appropriate in-house project that align with their interests and career goals.
- Offer expertise and feedback to ensure rigorous methodology, innovative approaches, and meaningful contributions to the field.
- Assist in developing technical and professional skills through hands-on projects, laboratory work, and practical applications of theoretical knowledge.
- Provide personal mentorship, fostering a supportive relationship that encourages growth, resilience, and a positive academic experience.
- Facilitate connections between students and industry professionals, alumni, and other relevant networks to enhance their professional opportunities and industry exposure.

1020236374	**In-house Project**	540 Periods	C
PROJECT			12

- Ensure students have access to necessary resources, including research materials, lab equipment, software, and academic literature.
- Regularly monitor and evaluate the progress of the in-house project, providing constructive feedback and guidance to help them stay on track and achieve their goals.
- Instill and uphold high ethical and professional standards, encouraging students to practice integrity and responsibility in their work.
- Assist in preparing progress reports, writing recommendation letters, and facilitating grant applications.
- Organize and participate in workshops, seminars, and other educational events that enhance the learning experience and professional development .
- Address any issues or conflicts that arise, providing mediation and support to ensure a positive and productive academic environment.

Instructions to the students.

- Regularly meet with your internal faculty advisor for guidance on academic progress, research projects, and career planning. Be proactive in seeking advice and support from your faculty advisor.
- Use planners, calendars, and task management tools to keep track of assignments, project deadlines, and study schedules. Prioritize tasks to manage your time efficiently.
- Take advantage of opportunities to participate in in-house projects and hands-on activities. These experiences are crucial for applying your theoretical knowledge and gaining practical skills.
- Focus on improving essential professional skills such as communication, teamwork, problem-solving, and leadership. Participate in workshops and seminars that enhance these competencies.
- Actively seek networking opportunities through industry events, seminars, and meetings. Establish connections with peers, alumni, and professionals in your field to build a strong professional network.

1020236374	In-house Project	540 Periods	C
PROJECT			12

- Seek internships, co-op programs, or part-time jobs related to your field of study. Real-world experience is invaluable for understanding industry practices and enhancing your employability.
- Uphold high ethical standards in all your academic and professional activities. Practice integrity, honesty, and responsibility. Adhere to the ethical guidelines and standards set by your institution and the engineering profession.
- Adopt a mindset of lifelong learning. Stay updated with the latest developments and trends in engineering by reading industry journals, attending conferences, and taking additional courses.

Documents to be submitted by the student for an in-house project.

Submit a printed report of your in-house project work along with the fabrication model / analysis report for the End Semester Examination.

Rubrics for In-House Project Work

Sl. No.	Topics	Description
1	Objectives	Clearly defined and specific objectives outlined. Objectives align with the project's scope and purpose.
2	Literature Review	Thorough review of relevant literature. Identification of gaps and justification for the project's contribution.
3	Research Design and Methodology	Clear explanation of the research design. Appropriateness and justification of chosen research methods.

1020236374	In-house Project	540 Periods	C
PROJECT			12

4	Project Management	Adherence to project timeline and milestones. Effective organization and planning evident in the project execution.
5	Documentation	Comprehensive documentation of project details. Clarity and completeness in recording methods, results, and challenges.
6	Presentation Skills	Clear and articulate communication of project findings. Effective use of visuals, if applicable.
7	Analysis and Interpretation	In-depth analysis of data. Clear interpretation of results in the context of research questions.
8	Problem-Solving	Demonstrated ability to identify and address challenges encountered during the project. Innovative solutions considered where applicable.
9	Professionalism and Compliance	Adherence to ethical standards in research. Compliance with project guidelines and requirements.
10	Quality of Work	Overall quality and contribution of the project to the field. Demonstrated effort to produce high-quality work.

SCHEME OF EVALUATION

The mark allocation for Internal and End Semester Viva Voce are as below.

Internal Marks (40 Marks)*		
Review 1 (10 Marks)	Review 2 (15 Marks)	Review 3 (15 marks)
Committee: 5 Marks. Supervisor: 5 Marks	Committee: 7.5 Marks Supervisor: 7.5 Marks	Committee: 7.5 Marks Supervisor: 7.5 Marks

Note: * The rubrics should be followed for the evaluation of the internal marks during reviews.

1020236374	**In-house Project**	540 Periods	C
PROJECT			12

END SEMESTER EXAMINATION - Project Exam

The performance of each student in the project group would be evaluated in a viva voce examination conducted by a committee consisting of an external examiner and the project supervisor and an internal examiner.

End Semester (100)#			
Record (20 Marks)	Presentation (20 Marks)	Viva Voce (20 Marks)	Model / Analysis Report (40 Marks)
External: 10 Internal: 5 Supervisor: 5	External: 10 Internal: 5 Supervisor: 5	External: 10 Internal: 5 Supervisor: 5	External: 20 Internal: 10 Supervisor: 10

 # The marks scored will be converted to 60 Marks.

2020234274 2020237274	**Industrial Training (SW)**	540 Periods	C
PROJECT			12

Introduction

The main objective of the sandwich Diploma course is to mould a well-rounded technician acclimated with the industrial environment while being a student in the institution. The Sandwich Diploma Course study is pursued by students, in 7 Semesters of 3 ½ years duration, the subjects of 3 years-Full Time Diploma Course being regrouped for academic convenience.

While in the 4th semester students undergo Industrial Training for 6 months (December through May). They also do course work in the institution for one day in a week, While in the 7th semester they undergo another spell of 6 months (June through November) Industrial training.

The Apprenticeship (Amendment) Act 1973 is followed in regulating the Industrial training procedure for Sandwich Course.

Objectives

The main objective of industrial training for a diploma engineer is to provide practical, hands-on experience in real-world industrial settings, bridging the gap between academic learning and professional practice. This training aims to equip students with the skills, knowledge, and competencies required to effectively perform and succeed in the mechanical engineering industry.

Key aspects of this objective include:

- Enable students to apply the concepts and principles learned in the classroom to real-world engineering problems and scenarios.
- Develop essential technical skills.
- Enhance soft skills like communication, teamwork, problem-solving, and time management.
- Provide exposure to industrial machinery, tools, and equipment, along with the operational procedures and safety practices in a manufacturing or engineering environment.
- Offer insights into the daily operations and responsibilities of technicians, preparing students for the transition from academic settings to professional work environments.

2020234274 2020237274	**Industrial Training (SW)**	540 Periods	C
PROJECT			12

- Educate students on industry standards, quality control measures, and best practices in mechanical engineering and manufacturing processes.
- Help students explore various career paths within mechanical engineering, enabling them to make informed decisions about their future professional goals.
- Provide opportunities for networking with industry professionals and potential employers.
- Encourage creative thinking and innovation by challenging students to solve real-world engineering problems and improve existing processes or products.
- Instill a sense of professionalism, work ethics, and responsibility required in the engineering field.

Course Outcomes

CO 1: Demonstrate proficiency in using industrial machinery, tools, and software.

CO 2: Able to identify, analyze, and solve engineering problems using industry-standard methods and practices.

CO 3: Gain a comprehensive understanding of industrial manufacturing processes, quality control, and safety practices.

CO 4: Exhibit improved communication, teamwork, and professional behavior in an industrial setting.

CO 5: Apply theoretical concepts learned in their coursework to practical engineering tasks and projects.

Duties Responsibilities of the Faculty Mentor.

Faculty mentors play a crucial role in overseeing and guiding students during their industrial training program in Diploma engineering.

2020234274 2020237274	**Industrial Training (SW)**	540 Periods	C
PROJECT			12

Pre-Training Responsibilities:

1. Orientation and Preparation:
    - Conduct orientation sessions to familiarize students with the objectives, expectations, and guidelines of the industrial training program.
    - Assist students in understanding the importance of industrial training in their academic and professional development.
2. Placement Coordination:
    - Collaborate with the placement cell or industry liaison office to secure suitable training placements for students that align with their academic specialization and career interests.
    - Facilitate communication between the institution and host organizations to ensure smooth coordination of training arrangements.
3. Training Plan Development:
    - Help students develop a detailed training plan outlining learning objectives, tasks, and expected outcomes for the training period.
    - Guide students in setting SMART (Specific, Measurable, Achievable, Relevant, Time-bound) goals for their training experience.

During Training Responsibilities:

4. Monitoring and Support:
    - Regularly monitor the progress of students during their industrial training. Maintain communication with both students and industry supervisors to track performance and address any issues that may arise.
    - Provide ongoing support and guidance to students, offering advice on technical challenges, professional conduct, and workplace etiquette.
5. Technical Guidance:
    - Offer technical guidance and mentorship related to the specific engineering discipline or specialization of the students. Help them apply theoretical knowledge to practical situations encountered in the industry.

2020234274 2020237274	**Industrial Training (SW)**	540 Periods	C
PROJECT			12

6. Problem-Solving Assistance:
    - Assist students in overcoming obstacles or challenges encountered during their training. Encourage them to develop problem-solving skills and resilience in real-world engineering scenarios.
7. Feedback and Evaluation:
    - Provide constructive feedback on students' performance based on reports, assessments, and observations gathered from industry supervisors.
    - Evaluate students' achievements in relation to their training objectives and competencies developed during the program.

Post-Training Responsibilities:

8. Reflection and Debriefing:
    - Conduct debriefing sessions with students to reflect on their training experiences, discuss lessons learned, and identify areas for further improvement.
    - Help students articulate their learning outcomes and how these experiences contribute to their professional growth.
9. Documentation and Reporting:
    - Ensure comprehensive documentation of students' training activities, achievements, and feedback received from industry supervisors.
    - Prepare reports summarizing students' performance and submit these to relevant departments or committees for review and assessment.
10. Career Counseling:
    - Provide career guidance and counseling to students based on their industrial training experiences. Assist them in leveraging these experiences for future job applications or further academic pursuits.
11. Continuous Improvement:
    - Collaborate with industry partners to continuously improve the quality and relevance of the industrial training program.

- Incorporate feedback from students and industry supervisors to enhance the effectiveness of future training placements.

By fulfilling these duties and responsibilities, faculty mentors contribute significantly to the overall educational experience and professional development of Diploma engineering students during their industrial training program.

Instructions to the students

Here are some instructions for Diploma engineering students undergoing industrial training during their academic duration:

Before Starting Industrial Training:

1. **Orientation and Preparation:**
   - Attend orientation sessions conducted by the institution or faculty mentors to understand the objectives, expectations, and guidelines of the industrial training program.
   - Familiarize yourself with the specific policies, procedures, and safety regulations of the host organization where you will be undergoing training.
2. Setting Goals:
   - Set clear and specific goals for your industrial training period. Define what skills, knowledge, and experiences you aim to gain during this time.
   - Discuss your goals with your faculty mentor and seek their guidance in developing a training plan that aligns with your career aspirations.
3. Professional Attire and Conduct:
   - Dress appropriately and professionally according to the standards of the industry and host organization.
   - Maintain a positive attitude, demonstrate punctuality, and adhere to workplace etiquette and norms.

2020234274 2020237274	**Industrial Training (SW)**	540 Periods	C
PROJECT			12

During Industrial Training:

4. Learning and Engagement:
    - Actively engage in all assigned tasks and projects. Seek opportunities to learn new skills and technologies relevant to your field of study.
    - Take initiative in asking questions, seeking clarification, and participating in discussions with supervisors and colleagues.
5. Adaptability and Flexibility:
    - Adapt to the work environment and demonstrate flexibility in handling various responsibilities and challenges that arise during your training.
    - Be open to different roles and tasks assigned to you, as this will broaden your experience and skill set.
6. Professionalism and Communication:
    - Communicate effectively with supervisors, colleagues, and clients as required. Practice clear and concise verbal and written communication.
    - Demonstrate professionalism in all interactions, respecting confidentiality, and adhering to company policies and procedures.
7. Safety and Compliance:
    - Prioritize safety at all times. Familiarize yourself with safety protocols, procedures, and emergency exits in the workplace.
    - Follow all safety guidelines and regulations to ensure your well-being and that of others around you.

After Completing Industrial Training:

8. Reflection and Documentation:
    - Reflect on your training experience. Evaluate what you have learned, the challenges you faced, and how you have grown professionally.
    - Maintain a journal or log documenting your daily activities, achievements, and lessons learned during the training period.

2020234274 2020237274	**Industrial Training (SW)**	540 Periods	C
PROJECT			12

9. Feedback and Evaluation:
    - Seek feedback from your industry supervisor and faculty mentor on your performance and areas for improvement.
    - Use constructive feedback to enhance your skills and competencies for future career opportunities.
10. Career Planning:
    - Use your industrial training experience to inform your career planning and decision-making process.
    - Discuss your career goals and aspirations with your faculty mentor or career counselor for guidance on next steps after completing your diploma.

By following these instructions, Diploma engineering students can make the most of their industrial training experience, gain valuable insights into their chosen field, and prepare themselves effectively for future professional endeavors.

Attendance Certification

Every month students have to get their attendance certified by the industrial supervisor in the prescribed form supplied to them. Students have also to put their signature on the form and submit it to the institution supervisor. Regularity in attendance and submission of report will be duly considered while awarding the Internal Assessment mark.

Training Reports

The students have to prepare two types of reports: Weekly reports in the form of a diary to be submitted to the concerned faculty mentor of the institution. This will be reviewed while awarding Internal assessment. The details of the activity during the training will be monitored by the Faculty mentor through the faculty advisor and student.

The feedback shall be given to the HOD / Principal for further necessary action.

2020234274 2020237274	**Industrial Training (SW)**	540 Periods	C
PROJECT			12

Industrial Training Diary

Students are required to maintain the record of day-to-day work done. Such a record is called Industrial training Diary. Students have to write this report regularly. All days for the week should be accounted for clearly giving attendance particulars (Presence, absence, Leave, Holidays etc.). The concern of the Industrial supervisor is to periodically check these progress reports.

Comprehensive Training Report

In addition to the diary, students are required to submit a comprehensive report on training with details of the organisation where the training was undergone after attestation by the supervisors. The comprehensive report should incorporate study of plant / product / process / construction along with intensive in-depth study on any one of the topics such as processes, methods, tooling, construction and equipment, highlighting aspects of quality, productivity and system. The comprehensive report should be completed in the last week of Industrial training. Any data, drawings etc. should be incorporated with the consent of the Organisation.

2020234274 2020237274	**Industrial Training (SW)**	540 Periods	C
PROJECT			12

Scheme of Evaluation

Internal Assessment

Students should be assessed for 40 Marks by industry supervisor and polytechnic faculty mentor during 3rd Month and 5th Month. The total marks (40 + 40) scored shall be converted to 40 marks for the Internal Assessment.

Sl. No.	Description	Marks
A	Punctuality and regularity. (Attendance)	10
B	Level / proficiency of practical skills acquired. Initiative in learning / working at site	10
C	Self expression / communication skills. Interpersonal skills / Human Relation.	10
D	Report and Presentation.	10
Total		40

2020234274 2020237274	**Industrial Training (SW)**	540 Periods	C
PROJECT			12

End Semester Examination - Project Exam

Students should be assessed for 100 Marks both by the internal examiner and external examiner appointed by the Chairman Board of Examinations after the completion of internship period of six months. The marks scored will be converted to 60 marks for the End Semester Examination.

Sl. No.	Description	Marks
A	Daily Activity Report.	20
B	Comprehensive report on Internship, Relevant Internship Certificate from the concerned department.	30
C	Presentation by the student at the end of the Internship.	30
D	Viva Voce	20
Total		100